CONSTRUCT WARRANT OFFICER CAREER COLLEGE ACADEMIC BUILDING

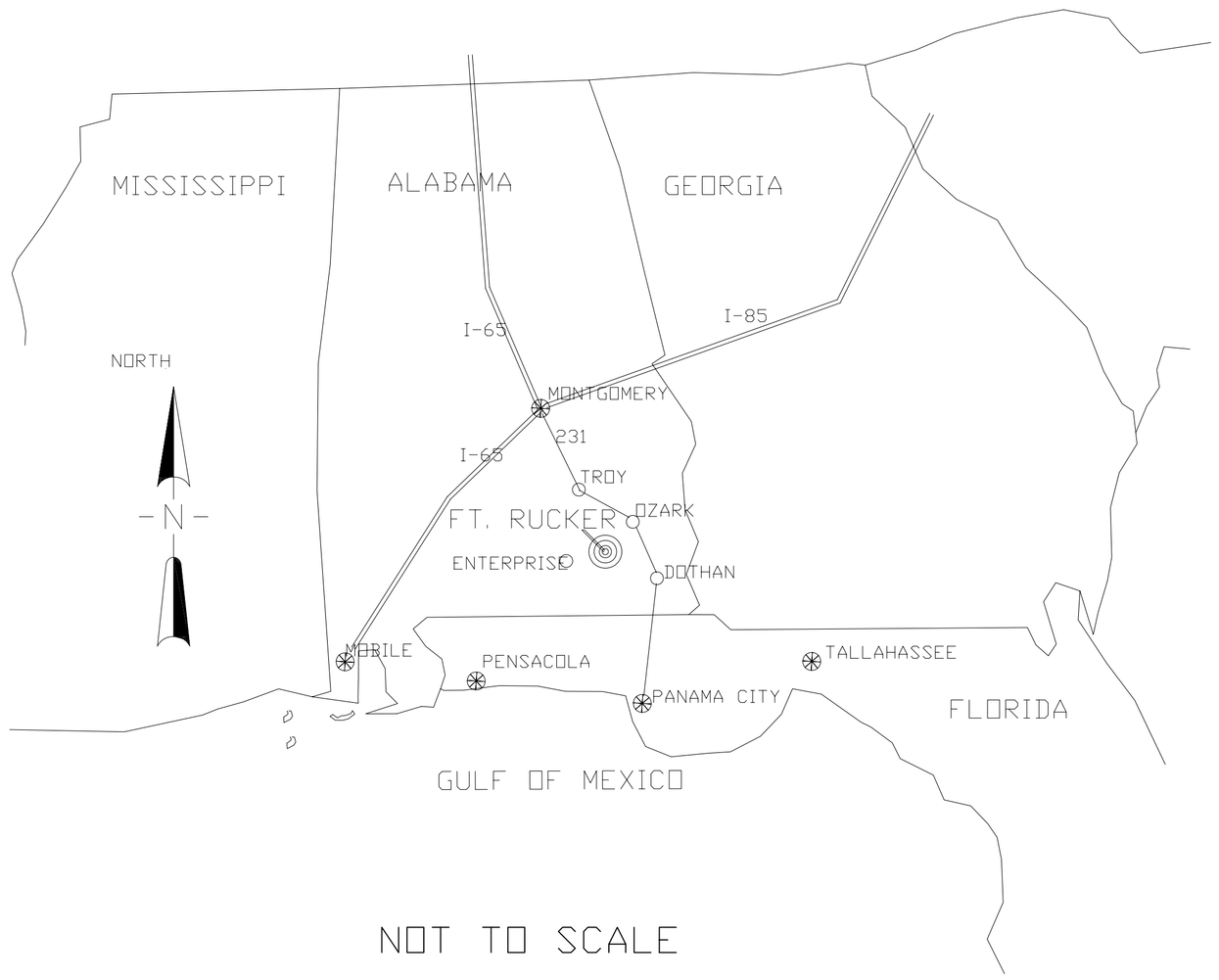

NOT TO SCALE

REGIONAL MAP

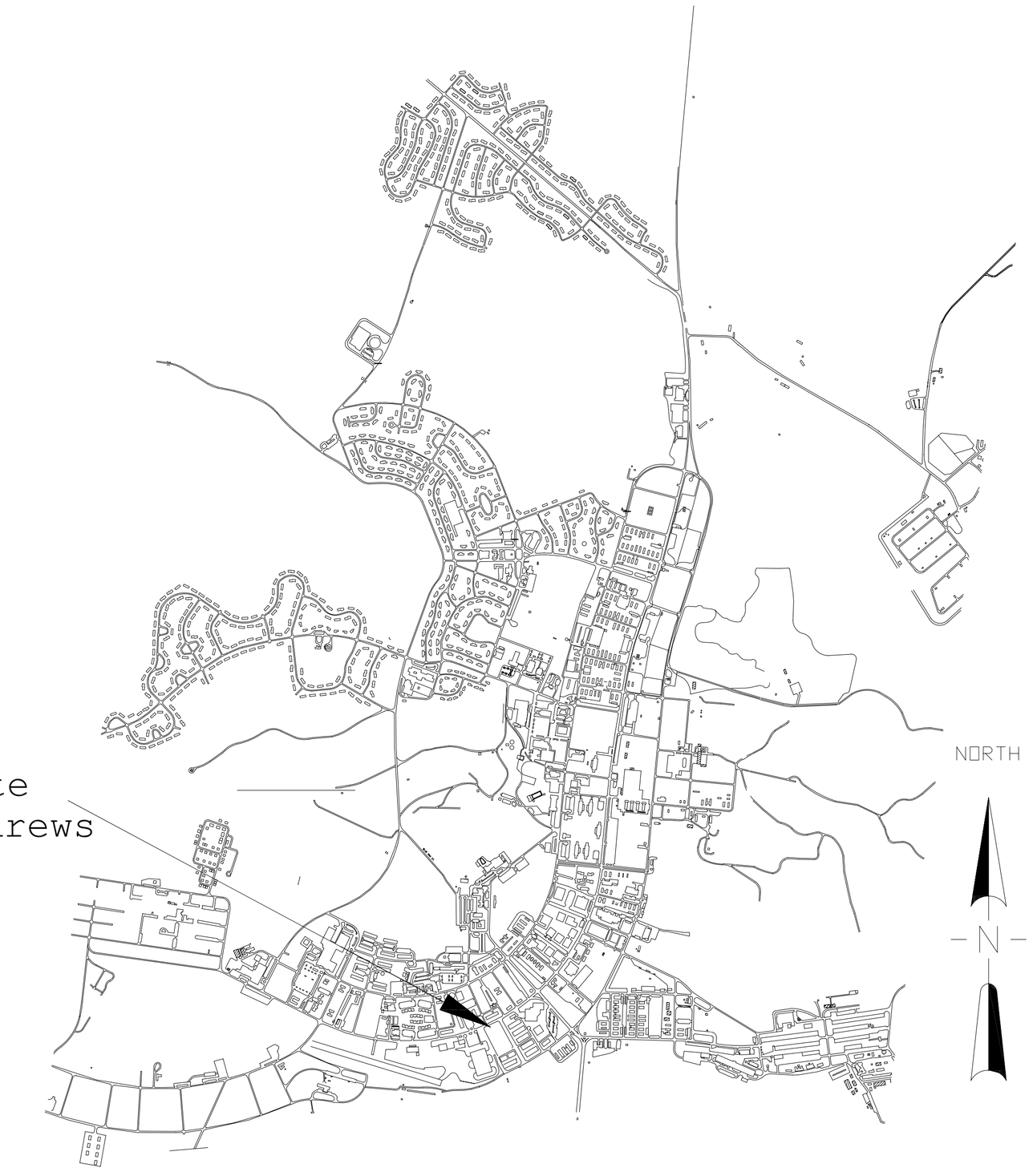

NOT TO SCALE

Vicinity Map

INDEX TO DRAWINGS

X-1	MAP AND INDEX
C-1	EXISTING SITE PLAN
C-2	FINAL SITE GRADE PLAN
S-1	FOUNDATION PLAN
S-2	FOUNDATION DETAILS
S-3	SODDING
A-1	ARCHITECTURAL FLOOR PLAN
A-2	EXTERIOR FRONT ELEVATION
A-3	DOOR/FINISH SCHEDULES
A-4	WALL SECTIONS
A-5	LATRINE AND CABINET DETAILS
A-6	REFLECTED CEILING PLAN
FS-1	FIRE SUPPRESSION
M-1	HVAC PLAN
P-1	WATER PLAN
P-2	SEWER PLAN
P-3	PLUMBING NOTES/RISER DIAGRAM
E-1	ELECTRICAL SITE PLAN
E-2	ELECTRICAL PLAN
E-3	LIGHTING PLAN
E-4	FIRE SAFETY/COMMUNICATIONS
E-5	ONE LINE/PANEL SCHEDULE
E-6	LIGHTING FIXTURE SCHEDULE

DPW Engineering
Fort Rucker, Alabama

Symbol	No.	Description	Date	Approved
		Revisions		

Date: 11/08/06
File No.
CADD File Name: HB 001326J-X1
Solicitation Number: N/A

Designed By:
Drawn By:
Checked By:
Reviewed By:

DIRECTORATE-PUBLIC WORKS
ENGINEERING BRANCH
FORT RUCKER, ALABAMA
HB 00132-6J

FORT RUCKER, AL
WOCC ACADEMIC BUILDING 6012
SITE LOCATION DRAWING INDEX

Sheet Reference Number:
X-1

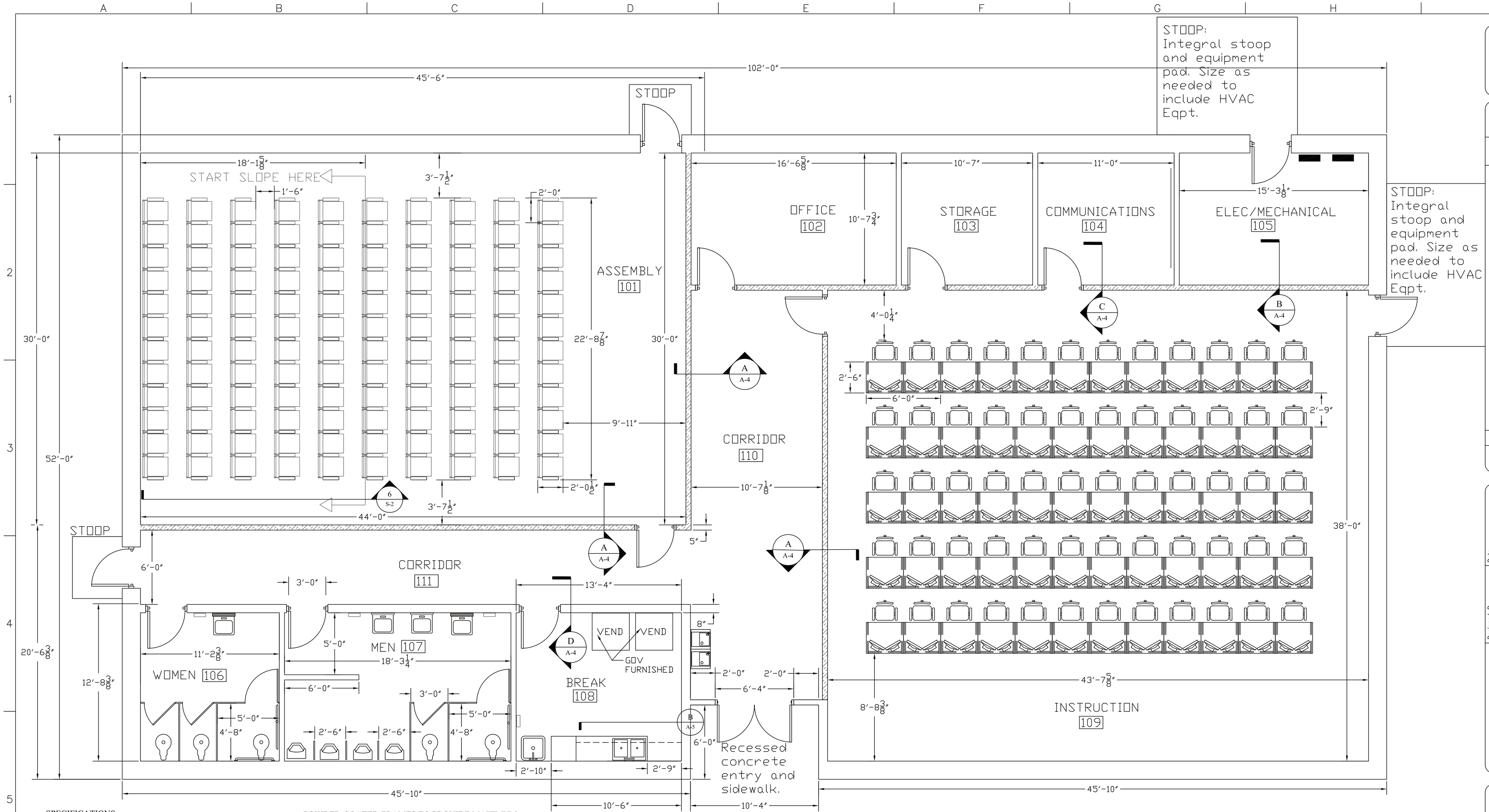

SPECIFICATIONS
SPECIFICATIONS FOR AUDITORIUM SEATING

"CONCERTO" OR EQUAL

AUDITORIUM SEATING FOR 120. 10 ROWS OF 12 SEATS COUPLED TOGETHER AND MOUNTED TO CONCRETE FLOOR WITH ANCHOR EMBEDMENT OF 1-1/2".

FIXED AUDITORIUM SEATING .
FLOOR MOUNTED SEATING WITH CUSHIONED SEATS
AUTOMATIC GRAVITY LIFT RETURN
TABLET ARM.

3" SEAT AND BACK FOAM. MUST HAVE POLYPROPYLENE SEAT AND BACK SHROUDS WITH WOOD BACK PANEL.

MUST HAVE 11-1/2" X 15-1/4" LARGE STYLE TABLET ARMS ONE MOTION RETURN TO PROVIDE SAFETY AND EASE IN EXITING. 10% LEFT HAND AND 90% RIGHT HAND.

POWDER-COATED FRAMES TO PROVIDE MAXIMUM DURABILITY.

MUST HAVE CA133 FIRE RETARDANT.

BLACK FINISH. BLACK SEAT AND BACK.

PROVIDE ALL LABOR, MATERIALS AND EQUIPMENT/SUPPLIES TO DELIVERY AND INSTALL ON-SITE AT FORT RUCKER, ALABAMA. INSTALLATION WILL BE FLOOR MOUNT TO CONCRETE FLOOR WITH A COMMON UPRIGHT SUPPORT ASSEMBLIES WITH UPHOLSTERED SEAT AND BACK CUSHIONS.

DUAL STEEL TUBULAR UPRIGHTS

CUSHIONED SEATS AND BACKS ENCLOSED IN POLYPROPYLENE SHROUD.

AUTOMATIC SEAT RETURN WITH A GRAVITY SEAT RETURN.

THE FIXED BACK ACCOMMODATES THREE POSITIONS AT 16 DEG., 20 DEG., AND 24 DEG. SEAT AND BACK WIDTH IS 22". 34" BACK HEIGHT PROVIDES UPPER BACK SUPPORT IN ADDITION TO LUMBAR SUPPORT.

SEATING SHALL BE DESIGNED AND MANUFACTURED IN COMPLIANCE WITH INTENT OF ANSI/BIFMA X5.4-1997 AND EXCEED ALL APPLICABLE BIFMA PERFORMANCE TEST CRITERIA.

STRUCTURAL BACK SHALL BE A 7-PLY, 7/16" MOLDED PLYWOOD INNER STRUCTURE BONDED WITHIN 3" URETHANE FOAM. FOAM DENSITY AVERAGE 1.8 LBS. PER CUBIC FOOT AND 27-39 LBS I.L.D. UPHOLSTERLY FABRIC SHALL BE BONDED TO FOAM AND ATTACHED THROUGH C-GEX UPHOLSTERY METHODS.

WOOD BACK PANEL CONSTRUCTED OF 8-PLY, 0.400M +/- .030M THICK OAK VENEER.

INSULATED INTERIOR WALLS. R-11 BATT INSULATION AT EACH PARTITION FRAME CAVITY.

CONTRACTOR SUPPLIED/INSTALLED FIXED SEATING (APPROX. 22"O.C.)

GOVERNMENT SUPPLIED/INSTALLED SEATING

A ARCHITECTURAL FLOOR PLAN

0 2' 4' 8'

SCALE: 1/4" = 1'-0"

DPW Engineering
Fort Rucker, Alabama

Symbol	No:	Description	Date	Approved
		Revisions		

Date: 11/08/06
File No.
CADD File Name: HB 001326J-A1
Solicitation Number: N/A

Designed By: J. CURRIE
Drawn By: J. CURRIE
Checked By: J. CURRIE
Reviewed By: C. POWELL

DIRECTORATE-PUBLIC WORKS
ENGINEERING BRANCH
FORT RUCKER, ALABAMA

HB 00132-6J

FORT RUCKER, AL
WOCC ACADEMIC BUILDING 6012

ARCHITECTURAL FLOOR PLAN

Sheet Reference Number:
A-1

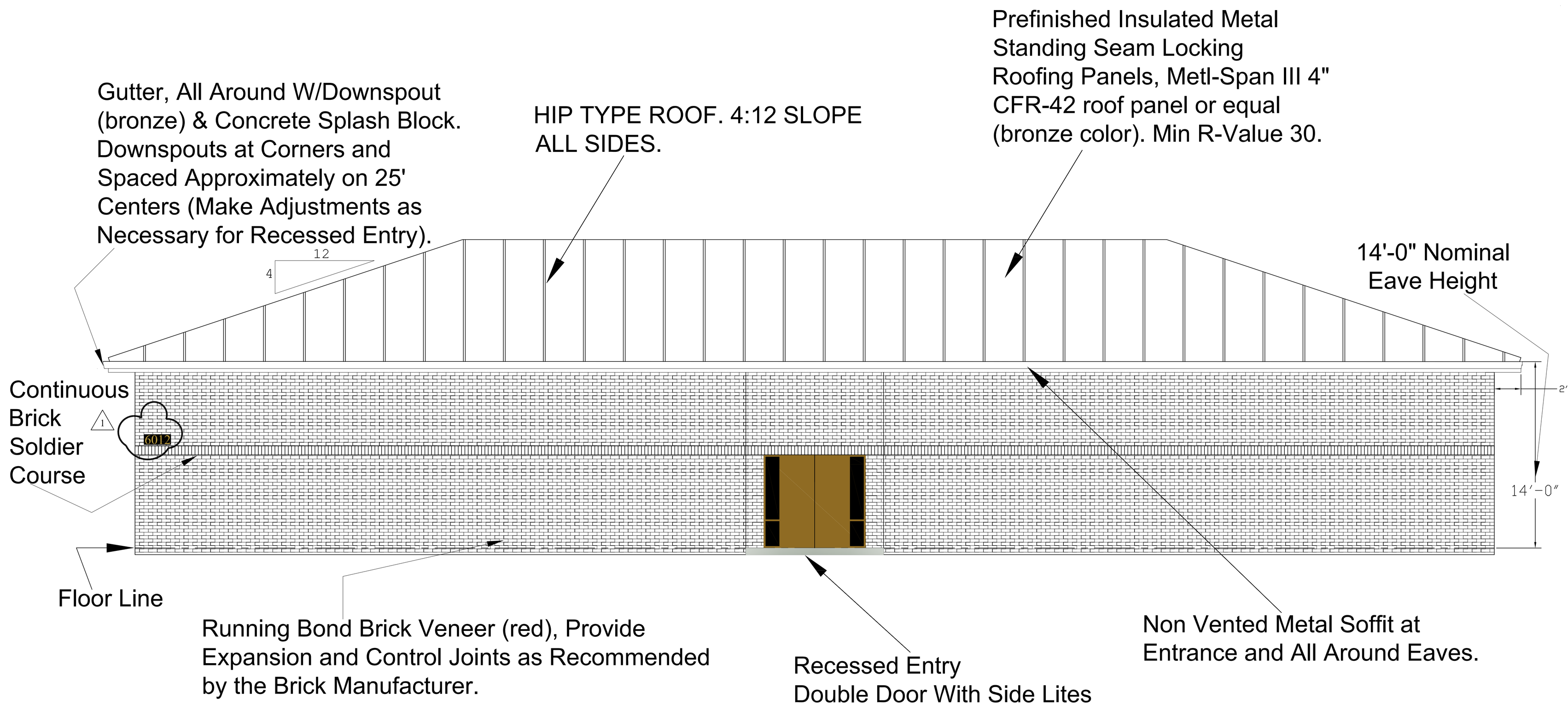

A EXTERIOR (FRONT) ELEVATION

0 2' 4' 8'

SCALE: 1/4" = 1'-0"

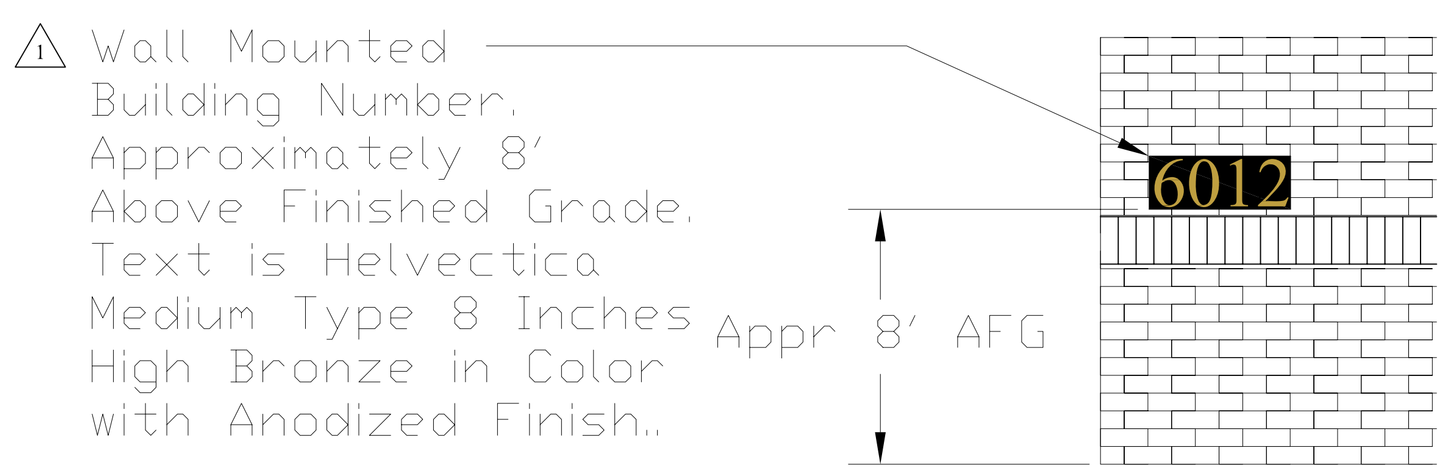

DPW Engineering
Fort Rucker, Alabama

Symbol	No.	Description	Date	Approved

Revisions

Designed By: J. CURRIE
Drawn By: J. CURRIE
Checked By: J. CURRIE
Reviewed By: C. POWELL
Date:
File No.
CADD File Name: HB 00132GJ-A2
Solicitation Number: N/A

DIRECTORATE-PUBLIC WORKS
ENGINEERING BRANCH
FORT RUCKER, ALABAMA

HB 00132-6J

FORT RUCKER, AL
WOCC ACADEMIC BUILDING 6012
EXTERIOR ELEVATION FRONT

Sheet Reference Number:
A-2

Room Finish Schedule

Room Number	Room Designation	Floor Material	Base Material	Wall Material	Notes	Ceiling Material	Fire Rating	Ceiling Height
101	Assembly	Vinyl Composition Tile	4" Coved Vinyl	Painted Gypsumboard (regular)		2'x2' Suspended Acoustical		12'-0"
102	Office	Vinyl Composition Tile	4" Coved Vinyl	Painted Gypsumboard (regular)		2'x2' Suspended Acoustical		9'-0"
103	Storage	Vinyl Composition Tile	4" Coved Vinyl	Painted Gypsumboard (regular)		Painted Gypsumboard (greenboard)		9'-0"
104	Communications	Vinyl Composition Tile	4" Coved Vinyl	Painted Gypsumboard (regular)		Painted Gypsumboard (greenboard)		9'-0"
105	Elec/Mechanical	Exposed Concrete W/ Hardner	Painted Wood	Painted Gypsumboard Type X		None		Open
106	Women's	Ceramic Tile	Ceramic Tile	Porcelain Tile Gypsumboard (greenboard)	Wainscot To 4' AFF Painted Gyp Above	Painted Gypsumboard (greenboard)		9'-0"
107	Men's	Ceramic Tile	Ceramic Tile	Porcelain Tile Gypsumboard (greenboard)	Wainscot To 4' AFF Painted Gyp Above	Painted Gypsumboard (greenboard)		9'-0"
108	Break Room	Vinyl Composition Tile	4" Coved Vinyl	Painted Gypsumboard (greenboard)		Painted Gypsumboard (greenboard)		9'-0"
109	Instruction	Vinyl Composition Tile	4" Coved Vinyl	Painted Gypsumboard (regular)		2'x2' Suspended Acoustical		12'-0"
110	Corridor	Vinyl Composition Tile	4" Coved Vinyl	Painted Gypsumboard (regular)		2'x2' Suspended Acoustical		9'-0"
111	Corridor	Vinyl Composition Tile	4" Coved Vinyl	Painted Gypsumboard (regular)		2'x2' Suspended Acoustical		9'-0"

NOTES:
1. PROVIDE OUTSIDE CORNER TREATMENT (CAP) FOR COVED VINYL APPLICATIONS. DO NOT WRAP CORNERS.

2. ALL ITEMS REQUIRING COLOR SELECTIONS SHALL BE SUBMITTED TO THE CONTRACTING OFFICER'S REPRESENTATIVE AT THE SAME TIME FOR SELECTION.

DOUBLE ENTRY WITH SIDELITES

Doors and frames shall receive painted finish. Exterior doors and frames shall be painted to match metal building trim. Color of interior doors and frames will be selected.

Bronze Anodized Extruded Aluminum Assembly

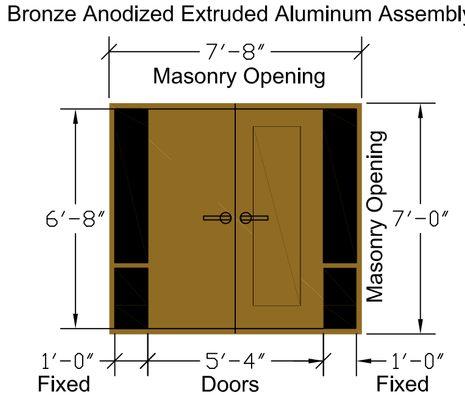

1

Sidelites shall be safety glass meeting Force Protection Requirements Below:

Provide Level 2 blast resistance when tested in accordance with GSA TS01 at a peak pressure of 9 psi (62 kPa) and impact resistance complying with ANSI Z97.1. Use blast resistant film, 1/4 inch (6 mm) thick clear annealed glass, and extruded aluminum anchoring angle applied to 4 sides of opening. Mounting accessories shall be as recommended by manufacturer. For other methods meeting required protection see DOD Security Engineering Design Manual.

Exterior Door Schedule

Masonry Opening

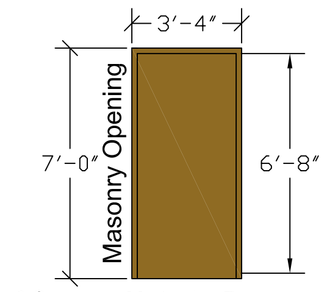

18 ga. Metal Door
16 ga. Metal Frame

2 3 4

Interior Door Schedule

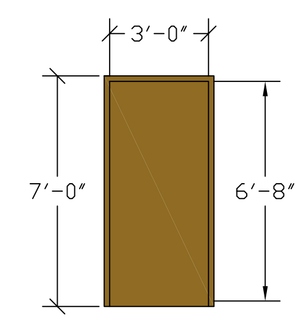

20 ga. Metal Door
18 ga. Metal Frame

5 6 7 9

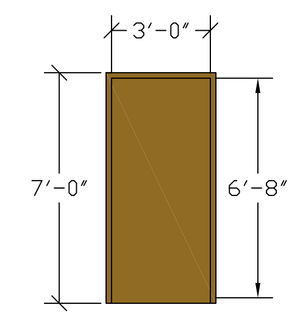

18 ga. Metal Door
16 ga. Metal Frame

8 10 11 12 13

HW-1: DOOR 1

(1) 3 PR HAGER BB 1279, 4 $\frac{1}{2}$" X 4 $\frac{1}{2}$", NRP, 26D
(2) SCHLAGE MONARCH 17 SERIES TYPE 5, LEVER, FUNCTION 08, 26D
(1) PEMKO 171A ALUM THRESHOLD
(2) NORTON 8501 BFAL CLOSERS
(2) HAGER 190, 8" X 2" LDW, 32D KICK PLATE
(1) PEMKO 346C AL RAIN DRIP
(2) PEMKO 303AV
(2) PEMKO 315CN SWEEP

HW-2: DOORS 2,3,4

(1) 1 $\frac{1}{2}$ PR HAGER BB 1279, 4 $\frac{1}{2}$" X 4 $\frac{1}{2}$", NRP, 26D
(1) SCHLAGE MONARCH 17 SERIES TYPE 5, LEVER, FUNCTION 08, 26D
(1) PEMKO 171A ALUM THRESHOLD
(1) NORTON 8501 BFAL CLOSERS
(1) HAGER 190, 8" X 2" LDW, 32D KICK PLATE
(1) PEMKO 346C AL RAIN DRIP
(2) PEMKO 303AV
(2) PEMKO 315CN SWEEP

HW-3: DOORS 5,6,7

(1) 1 $\frac{1}{2}$ PR HAGER BB 1279, 4 $\frac{1}{2}$" X 4 $\frac{1}{2}$", 26D
(1) HAGER 30S, 4 X 16, 32D, PUSH PLATE
(1) HAGER 33E, 4 X 16, 32D, PULL PLATE
(1) NORTON 8501 BFAL CLOSER
(1) HAGER 190S, 8" X 2" LDW, 32D
(1) HAGER 190S, 4" X 2" LDW, 32D
(1) HAGER 236W, 26D, WALL STOP BUMPER
DOORS SHALL HAVE PERMANENT, ACCESSABILITY COMPLIANT SIGNAGE MOUTNED AT THE APPROPRIATE HEIGHT ON THE LATCH SIDE OF CORRIDOR.

HW-4: DOORS 8,9,10,12,13

(1) 1 $\frac{1}{2}$ PR HAGER 1279, 4 $\frac{1}{2}$" X 4 $\frac{1}{2}$", 26D
(1) SCHLAGE AL53PD NEP, 626 LOCKSET
(1) HAGER 236W, 26D, WALL STOP BUMPER
(1) HAGER 190S, 8" X 2" LDW, 32D, KICK PLATE
(1) HAGER 190S, 4" X 2" LDW, 32D, MOP PLATE
DOORS SHALL HAVE PERMANENT, ACCESSABILITY COMPLIANT SIGNAGE MOUTNED AT THE APPROPRIATE HEIGHT ON THE LATCH SIDE OF CORRIDOR/WALL. DOOR 8 SHALL BE GRANDMASTER OF ALL LOCKSETS EXCEPT DOORS 10 AND 11 WHICH SHALL BE KEYED ALIKE CONFORMING TO THE FORT RUCKER MECHANICAL ROOM STANDARD.

HW-5: DOOR 11

(1) 1 $\frac{1}{2}$ PR HAGER 1279, 4 $\frac{1}{2}$" X 4 $\frac{1}{2}$", 26D
(1) SCHLAGE AL53PD NEP, 626 LOCKSET
(1) HAGER CHAIN DOOR CHECK 300D
(1) HAGER 190S, 8" X 2" LDW, 32D, KICK PLATE
(1) PEMKO 171A ALUM THRESHOLD
(1) PEMKO 346C AL RAIN DRIP
(1) PEMKO 303AV
(1) PEMKO 315CN SWEEP
DOORS 10 AND 11 SHALL BE KEYED ALIKE CONFORMING TO THE FORT RUCKER MECHANICAL ROOM STANDARD. DOOR 11 SHALL HAVE ROUGHNED OR KNURLED FINISH TO INDICATE ENTRY INTO A HAZARDOUS AREA.

DPW Engineering
Fort Rucker, Alabama

Symbol	No:	Description	Date	Approved
		Revisions		

Designed By: J. CURRIE
Drawn By: J. CURRIE
Checked By: J. CURRIE
Reviewed By: C. POWELL
Date:
File No.
CADD File Name: HB 00132GJ-A3
Solicitation Number: N/A

DIRECTORATE-PUBLIC WORKS
ENGINEERING BRANCH
FORT RUCKER, ALABAMA
HB 00132-6J

FORT RUCKER, AL
WOCC ACADEMIC BUILDING
DOOR SCHEDULES
INTERIOR FINISH SCHEDULE

Sheet Reference Number:
A-3

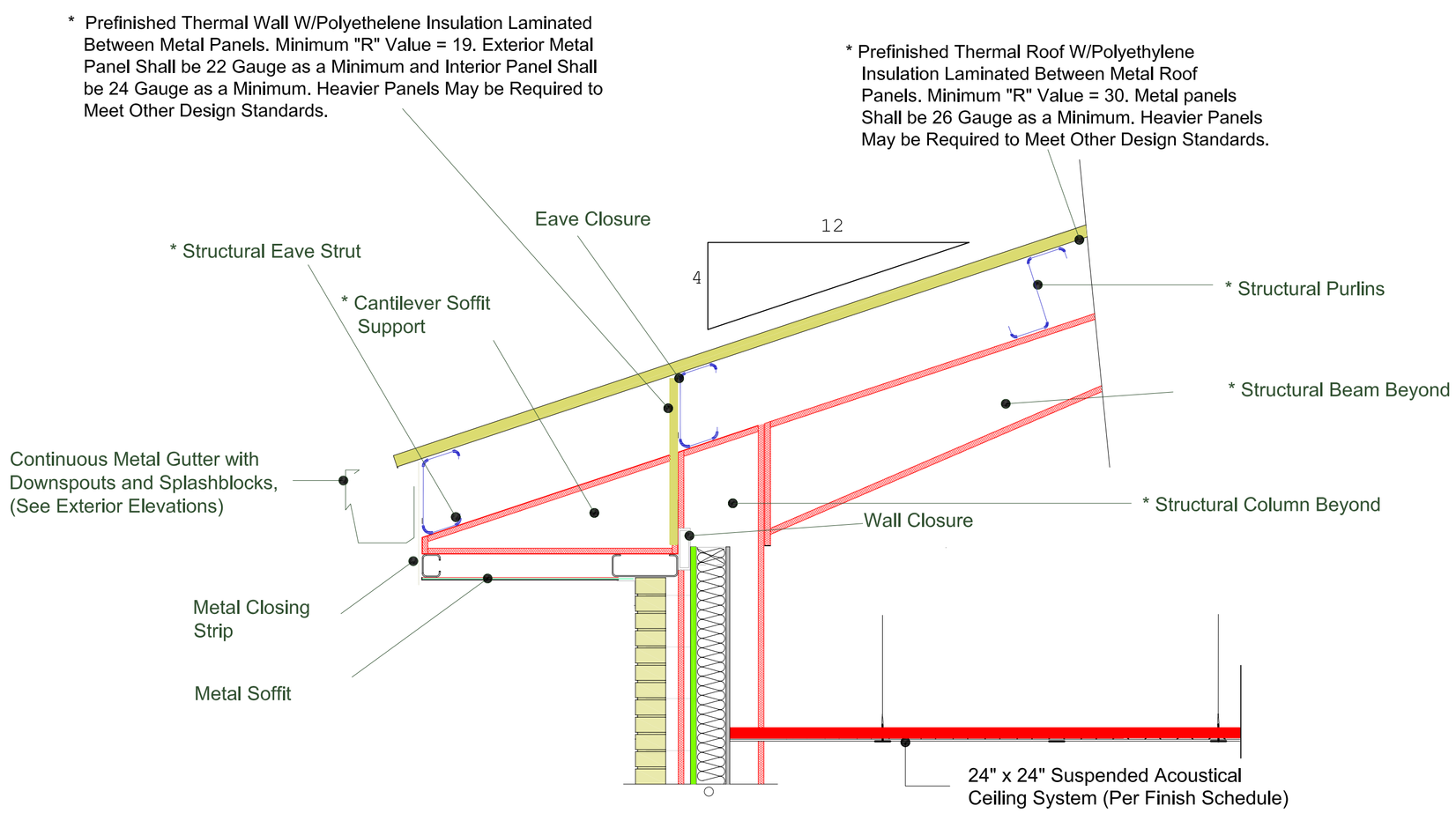

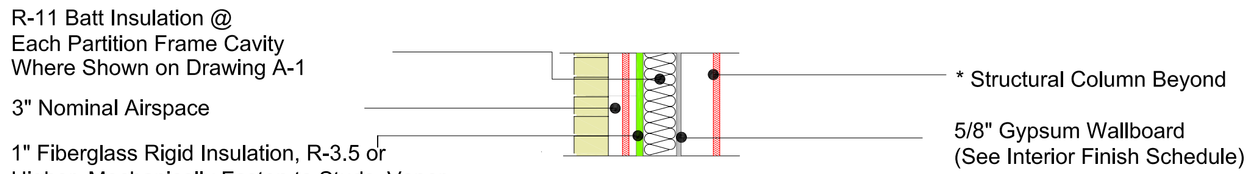

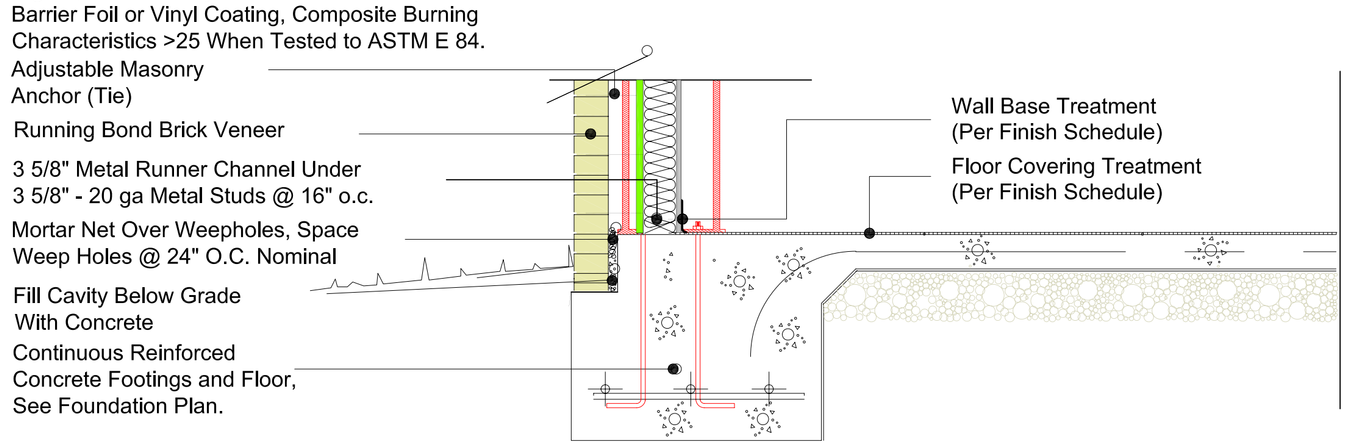

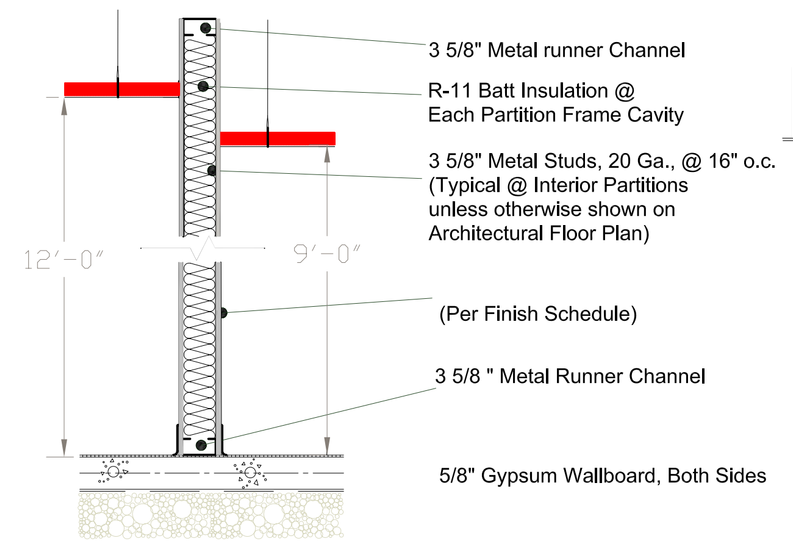

A A-1 TYPICAL SECTION THROUGH WALL
NO SCALE

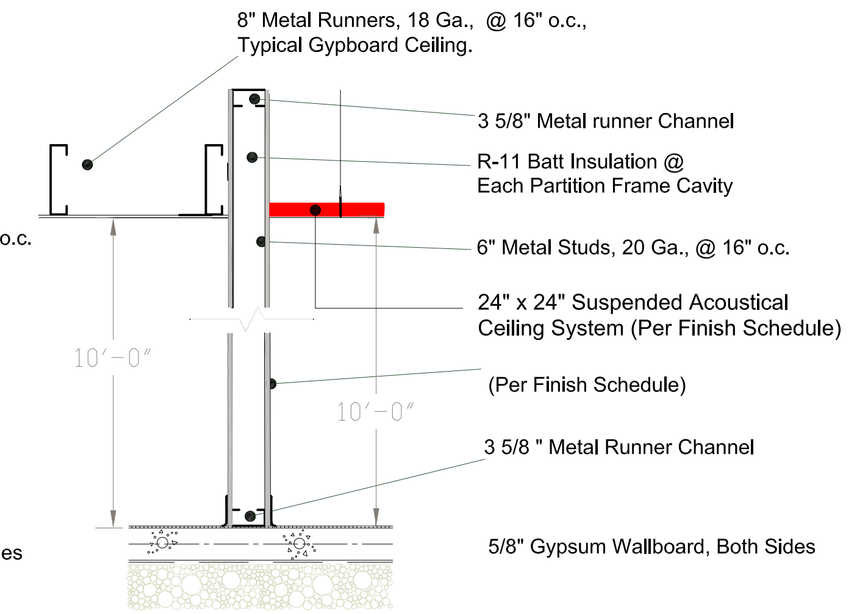

D A-1 TYPICAL SECTION THROUGH WALL
NO SCALE

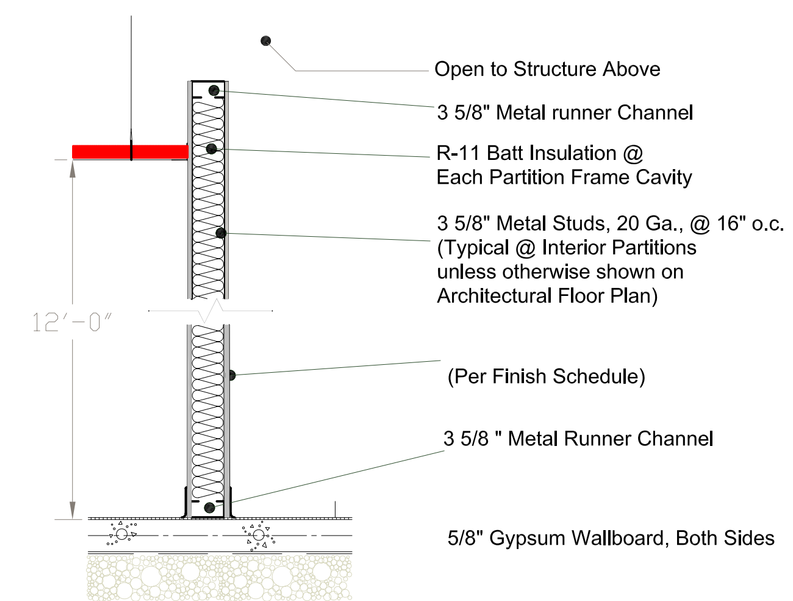

B A-1 TYPICAL SECTION THROUGH WALL
NO SCALE

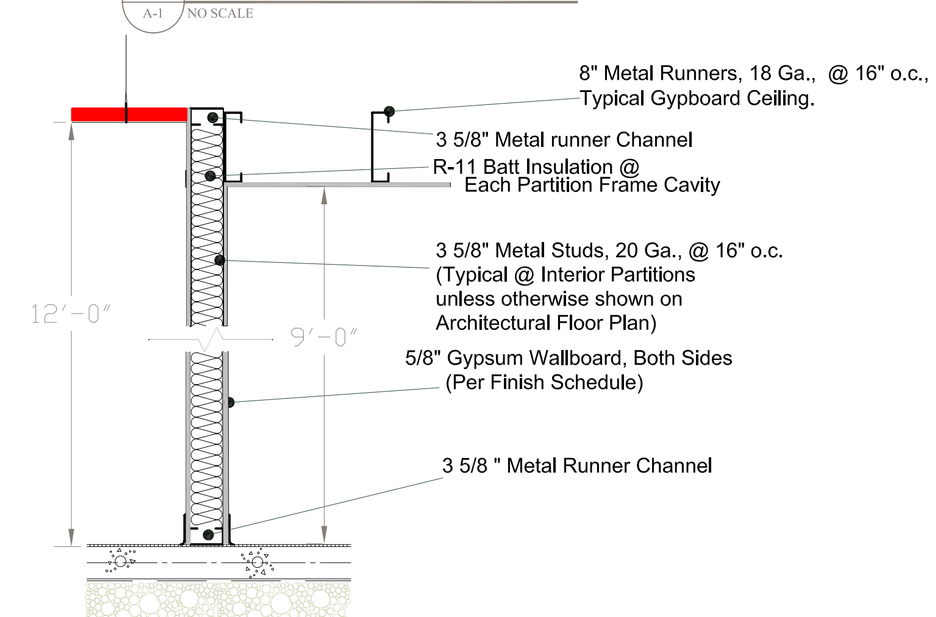

C A-1 TYPICAL SECTION THROUGH WALL
NO SCALE

Representative Wall Sections

* Actual Design and Connection of Structural Components Designated By Asterisk (*) Shall Be Provided by Metal Building Supplier.

DPW Engineering
Fort Rucker, Alabama

Symbol	No:	Description	Date	Approved
		Revisions		

Designed By: J. CURRIE
Drawn By: J. CURRIE
Checked By: J. CURRIE
Reviewed By: C. POWELL
Date:
File No.
CADD File Name: HB 00132GJ-A4
Solicitation Number: N/A

DIRECTORATE-PUBLIC WORKS
ENGINEERING BRANCH
FORT RUCKER, ALABAMA

HB 00132-6J

FORT RUCKER, AL
WOCC ACADEMIC BUILDING 6012

WALL SECTIONS

Sheet Reference Number:
A-4

NOTES:
1. See plumbing drawings for plumbing fixture schedule.
2. Water supply and drain pipes under lavatories and sinks shall be insulated or otherwise configured to protect against contact. There shall be no sharp or abrasive surfaces under lavatories and sinks.
3. Bathroom fixtures and grab bars shall be ADA compliant and installed in accordance with ADA and ABA accessibility guidelines dated 7/23/04 issued by the United States access board.
4. Vertical grab bar. The fixed side wall vertical grab bar shall be 18 inches minimum in length and shall be mounted with the bottom of the bar located between 39 and 41 inches above the floor, and with the center line of the bar located between 39 and 41 inches from the rear wall.

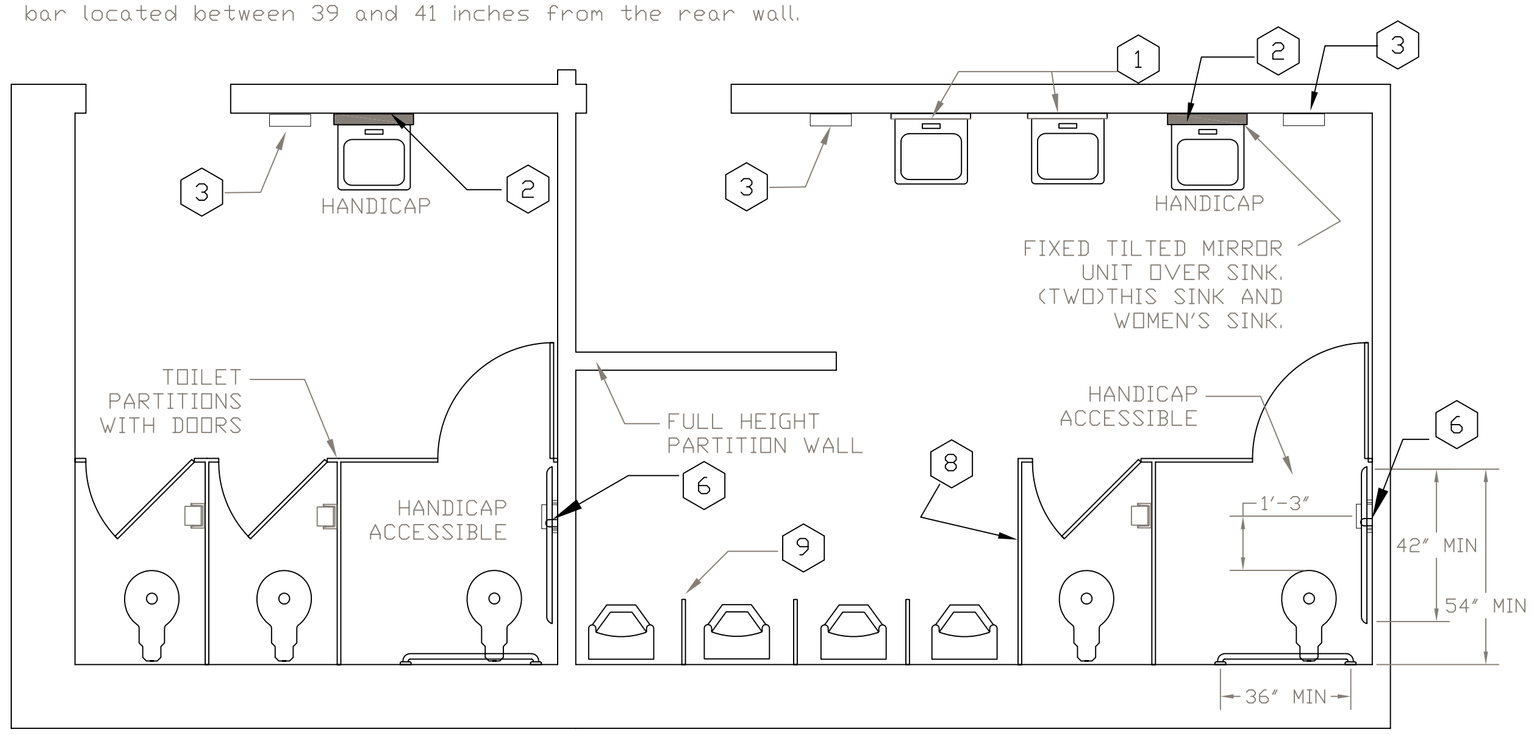

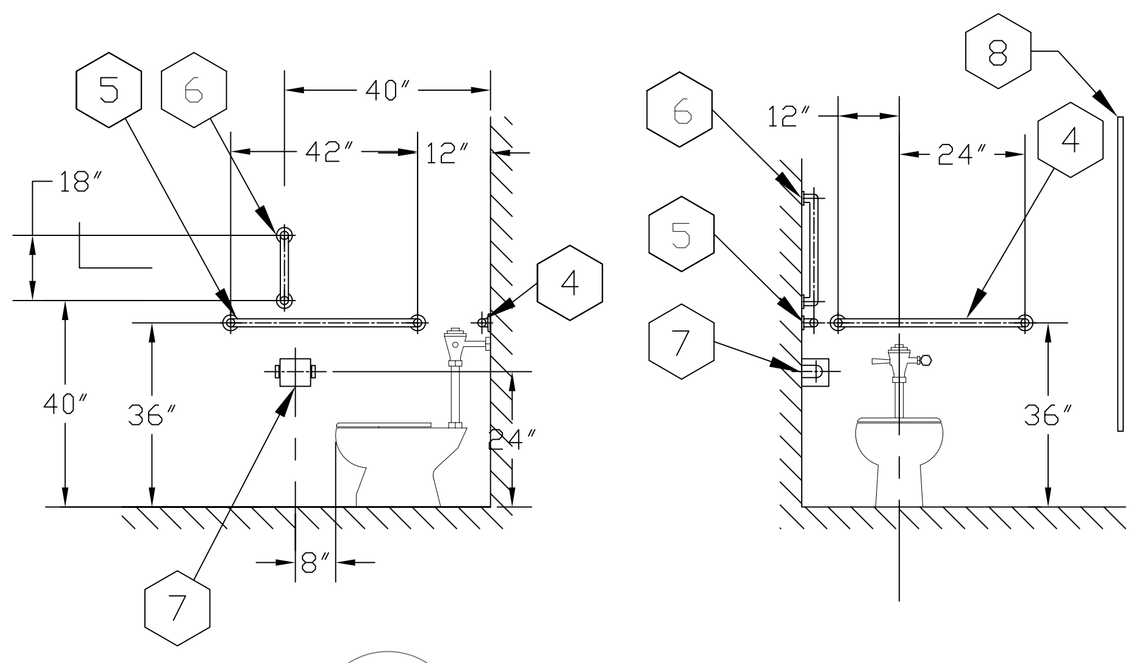

A LATRENE DETAILS
A-5

ACCESSORY SCHEDULE

MARK	ITEM/DESCRIPTION	REMARKS:
1	MIRRORED GLASS	FRAMED MIRROR SHALL BE BRADLEY CORP. MODEL 780, 18"W X 30"H OR SIMILAR EQUIV. MOUNT 40" AFF
2	MIRRORED GLASS	FIXED TILT MIRROR SHALL BE BRADLEY CORP. MODEL 740, 18"W X 30"H OR SIMILAR EQUIV. MOUNT 40" AFF
3	PAPER TOWEL DISPENSER	SURFACE MOUNT TOWEL DISPENSER SHALL BE BRADLEY 250-15 OR SIMILAR MOUNT 40" AFF
4	GRAB BAR 36"	BRADLEY CORP. MODEL 812, OR SIMILAR EQUIV. STAINLESS STEEL, STANDARD FINISH. SEE DETAIL THIS SHEET FOR MOUNTING.
5	GRAB BAR 42"	BRADLEY CORP. MODEL 812, OR SIMILAR EQUIV. STAINLESS STEEL, STANDARD FINISH. SEE DETAIL THIS SHEET FOR MOUNTING.
6	VERTICAL GRAB BAR 18"	BRADLEY CORP. MODEL 812, OR SIMILAR EQUIV. STAINLESS STEEL, STANDARD FINISH. SEE DETAIL THIS SHEET FOR MOUNTING.
7	TOILET TISSUE DISPENSER	BRADLEY CORP. MODEL 5084 OR SIMILAR EQUIV.
8	TOLIET PARTITION	SEE NOTES
9	URINAL LEG SCREEN	FLOOR AND WALL SUPPORTED

GENERAL NOTES

1. APPLY A CONTINUOUS BEAD OF SEALANT AROUND ALL FIXTURES WHERE FIXTURE INTERFACES WITH THE FLOOR OR WALL.
2. CONTRACTOR SHALL PROVIDE BLOCKING FOR MOUNTING/INSTALLING OF ALL ACCESSORIES, MATCH FRAMING MEMBER SIZES.
3. CONTRACTOR SHALL INSTALL ADEQUATE BLOCKING TO SUPPORT ALL FIXTURES, AND ENSURE SUPPORT MEETS FIXTURE MANUFR. REQUIREMENTS.
4. TOILET PARTITIONS SHALL BE SOLID PHENOLIC CORE, OVERHEAD BRACED, OF DIMENSION AND CONFIGURATION INDICATED, BY AMPCO IN COLOR L 169 LQ GRAY SONAE QUARTZ GRAFFITI RESISTANT LAMINATE FINISH. MEN'S TOILET TO HAVE LEG SCREEN PRIVACY PANELS TO MATCH TOILET PARTITION.

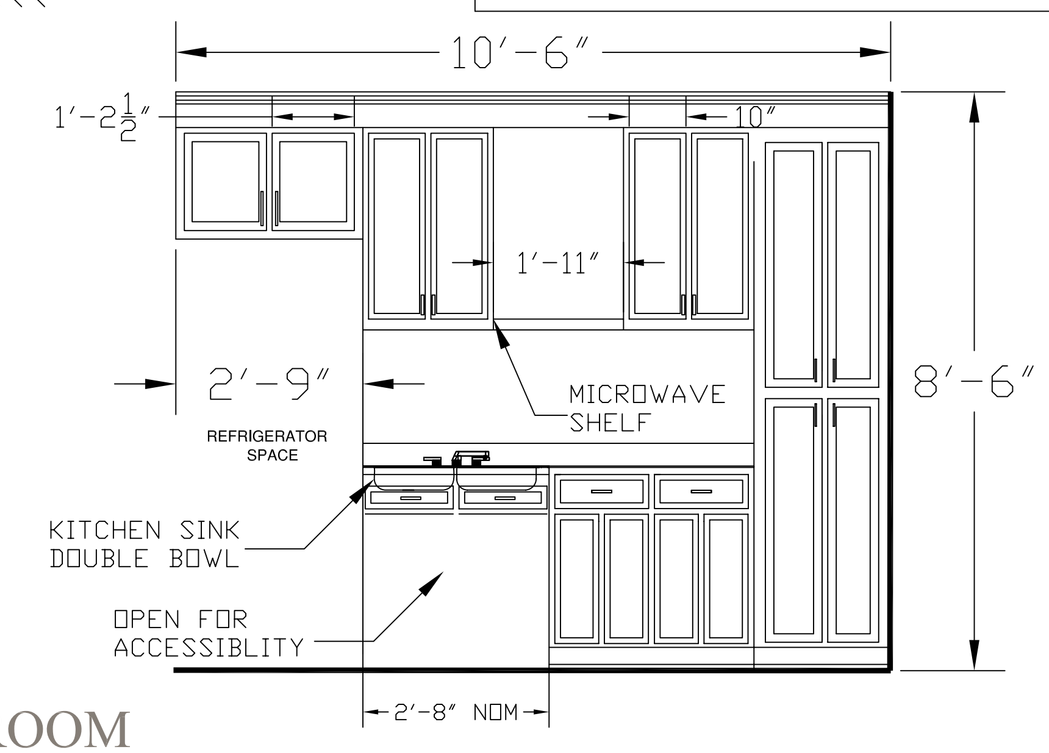

B BREAK ROOM
A-5

BREAK ROOM CABINETS SHALL BE 34"H KITCHEN BASE AND WALL CABINETS, WIDTH INDICATED, INCL. DRAWERS AND DOORS, EXPOSED LAMINATE: L 169 LQ GRAY SONAE QUARTZ GRAFFITI RESISTANT LAMINATE FINISH. BASE CAB TOP SHALL BE PRE-DRILLED FOR PLUMBING FIXTURES, W/ DBL. SINK CUT-OUT & OPEN BELOW FOR ADA.

DPW Engineering
Fort Rucker, Alabama

Symbol	No.	Description	Date	Approved
		Revisions		

Designed By: J. CURRIE
Drawn By: J. CURRIE
Checked By: J. CURRIE
Reviewed By: C. POWELL
Date:
File No.
CADD File Name: HB 00132GJ-A5
Solicitation Number: N/A

DIRECTORATE-PUBLIC WORKS
ENGINEERING BRANCH
FORT RUCKER, ALABAMA
HB 00132-6J

FORT RUCKER, AL
WOCC ACADEMIC BUILDING 6012
DETAILS
LATRENE AND
BREAK RM CABINETS

Sheet Reference Number:
A-5

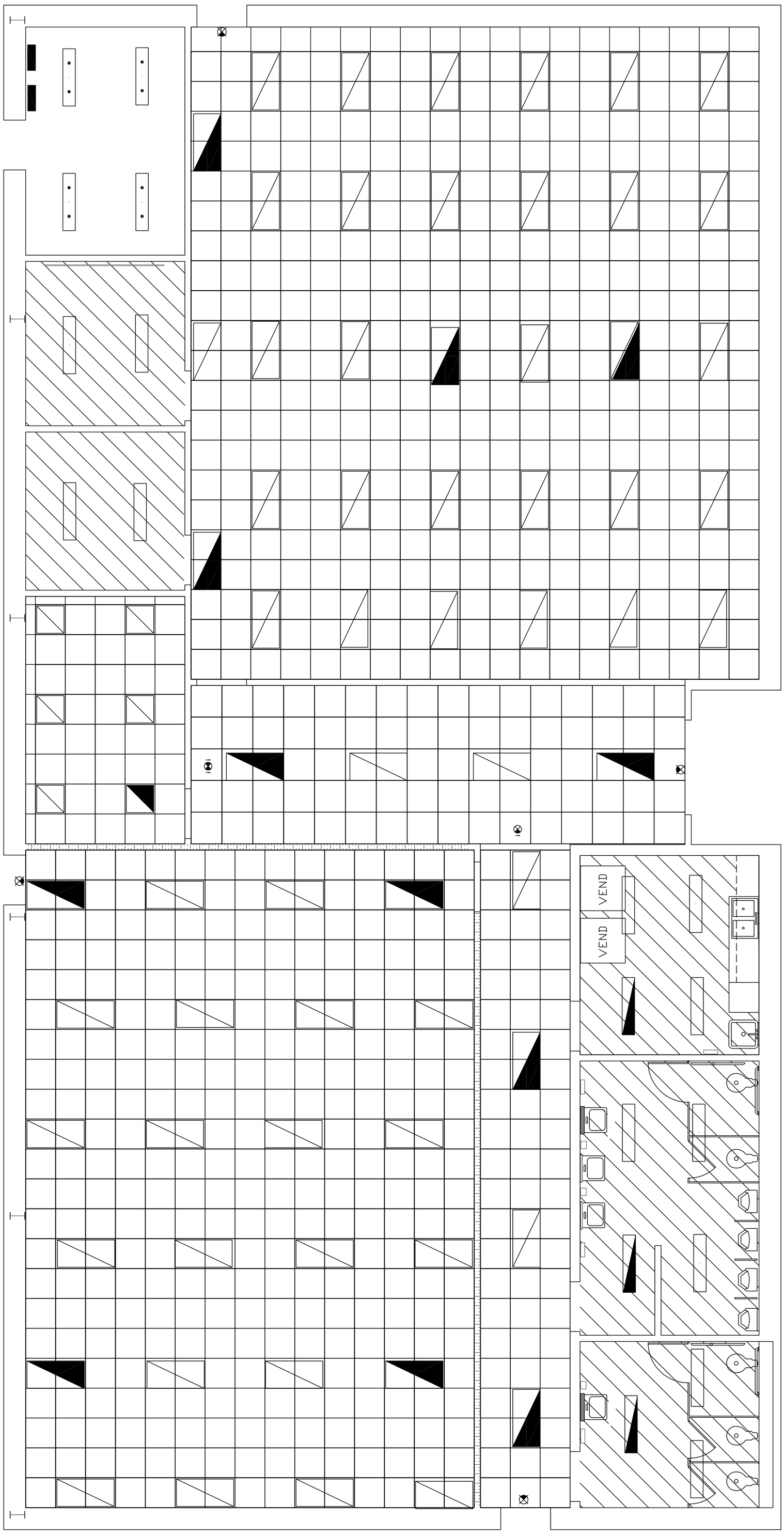

A REFLECTED CEILING PLAN

SCALE: 1/4" = 1'-0"

0 2' 4' 8'

FORT RUCKER, AL

WOCC ACADEMIC BUILDING 6012

REFLECTED CEILING PLAN

Sheet Reference Number: A-6

DIRECTORATE-PUBLIC WORKS
ENGINEERING BRANCH
FORT RUCKER, ALABAMA

HB 00132-6J

Designed By: J. CURRIE	Date:
Drawn By: J. CURRIE	File No.
Checked By: J. CURRIE	CADD File Name: HB 00132J-A6
Reviewed By: C. POWELL	Solicitation Number: N/A

Revisions

Symbol	No:	Description	Date	Approved

DPW Engineering
Fort Rucker, Alabama

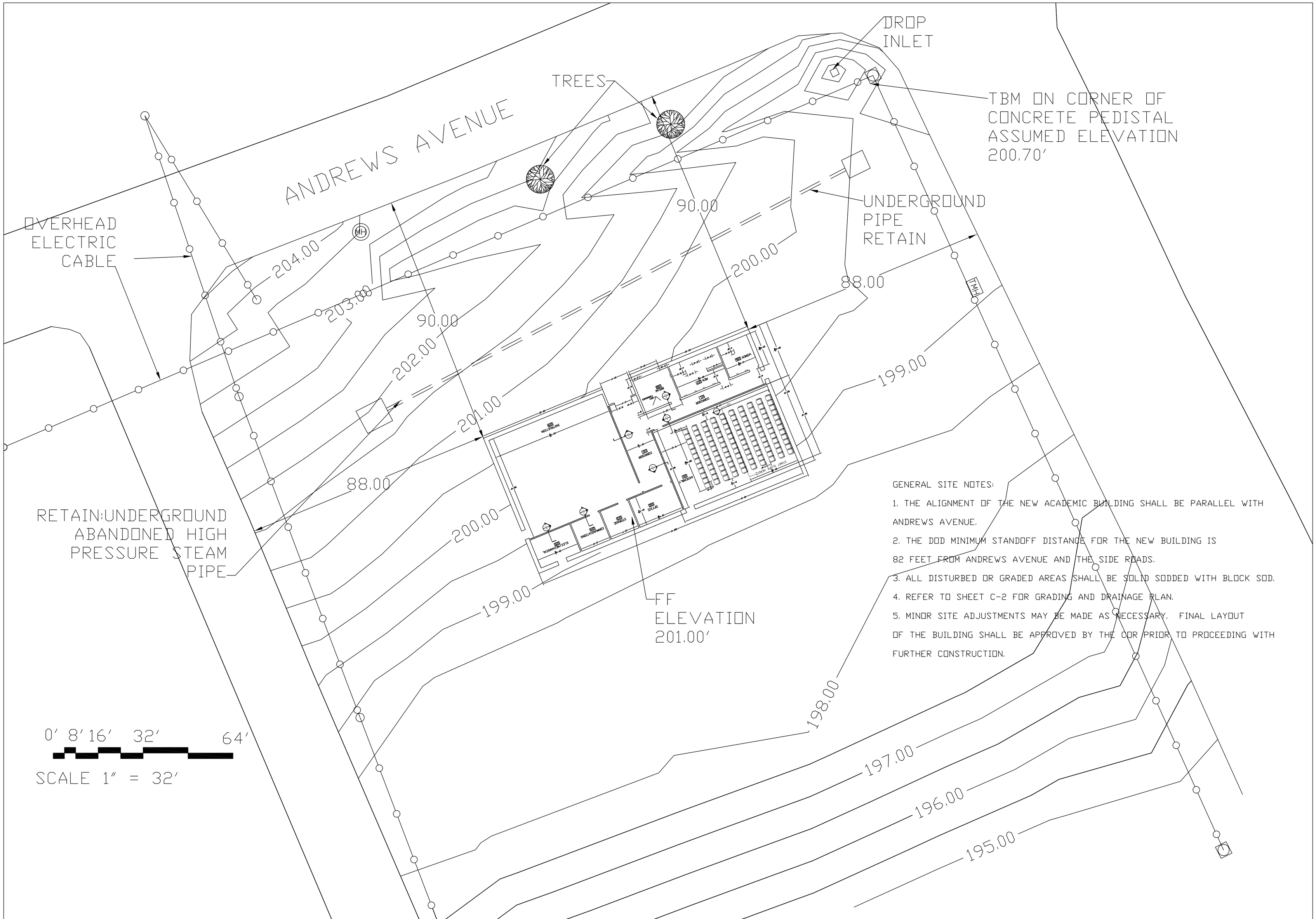

GENERAL SITE NOTES:

1. THE ALIGNMENT OF THE NEW ACADEMIC BUILDING SHALL BE PARALLEL WITH ANDREWS AVENUE.
2. THE DOD MINIMUM STANDOFF DISTANCE FOR THE NEW BUILDING IS 82 FEET FROM ANDREWS AVENUE AND THE SIDE ROADS.
3. ALL DISTURBED OR GRADED AREAS SHALL BE SOLID SODDED WITH BLOCK SOD.
4. REFER TO SHEET C-2 FOR GRADING AND DRAINAGE PLAN.
5. MINOR SITE ADJUSTMENTS MAY BE MADE AS NECESSARY. FINAL LAYOUT OF THE BUILDING SHALL BE APPROVED BY THE COR PRIOR TO PROCEEDING WITH FURTHER CONSTRUCTION.

DIRECTORATE OF PUBLIC WORKS
Fort Rucker, Alabama

Symbol	No:	Description	Date	Approved

Revisions

Date: DEC. 2006
File No:
CADD File Name: HB 001326J-C1
Solicitation Number:

Designed By: –
Drawn By: A. DYSON
Checked By: –
Reviewed By: –

DIRECTORATE OF PUBLIC WORKS ENGINEERING BRANCH FORT RUCKER, ALABAMA

CIVIL DESIGN IN HOUSE FORT RUCKER, ALABAMA

FORT RUCKER, ALABAMA
WOCC ACADEMIC BUILDING 6012

EXISTING SITE PLANS CONTOURS LINES

Sheet Reference Number:
C-1

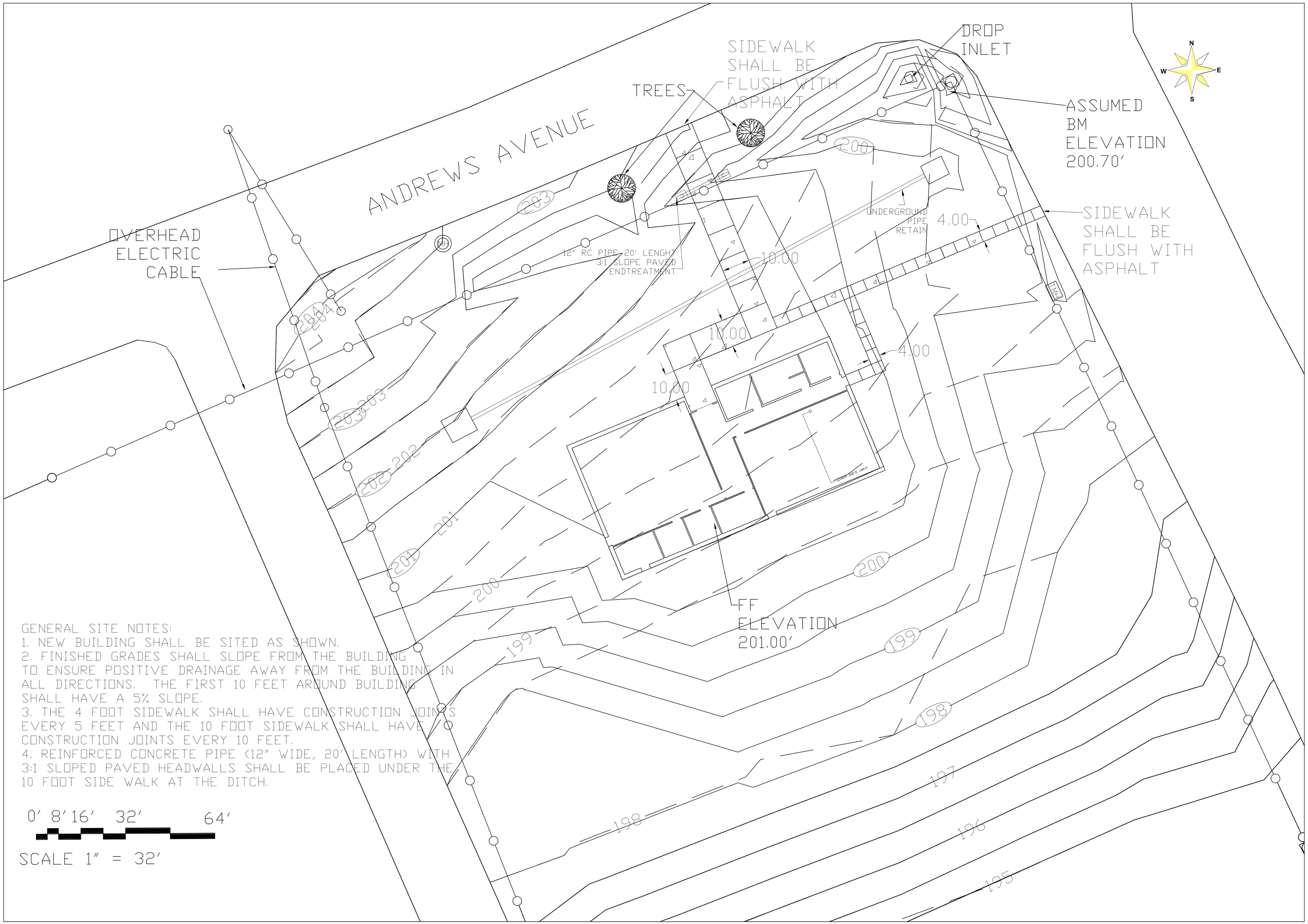

GENERAL SITE NOTES:
1. NEW BUILDING SHALL BE SITED AS SHOWN.
2. FINISHED GRADES SHALL SLOPE FROM THE BUILDING TO ENSURE POSITIVE DRAINAGE AWAY FROM THE BUILDING IN ALL DIRECTIONS. THE FIRST 10 FEET AROUND BUILDING SHALL HAVE A 5% SLOPE.
3. THE 4 FOOT SIDEWALK SHALL HAVE CONSTRUCTION JOINTS EVERY 5 FEET AND THE 10 FOOT SIDEWALK SHALL HAVE CONSTRUCTION JOINTS EVERY 10 FEET.
4. REINFORCED CONCRETE PIPE (12" WIDE, 20' LENGTH) WITH 3:1 SLOPED PAVED HEADWALLS SHALL BE PLACED UNDER THE 10 FOOT SIDE WALK AT THE DITCH.

0' 8' 16' 32' 64'

SCALE 1" = 32'

DIRECTORATE OF PUBLIC WORKS
Fort Rucker, Alabama

Symbol	No:	Description	Date	Approved
		Revisions		

Designed By: –
Drawn By: A. DYSON
Checked By: –
Reviewed By: –
Date: DEC. 2006
File No.
CADD File Name: HB 001326J-C2
Solicitation Number:

DIRECTORATE OF PUBLIC WORKS
ENGINEERING BRANCH
FORT RUCKER, ALABAMA

CIVIL DESIGN
IN HOUSE
FORT RUCKER, ALABAMA

FORT RUCKER, ALABAMA
WOCC ACADEMIC BUILDING 6012

FINAL GRADE PLAN CONTOURS LINES

Sheet Reference Number:
C-2

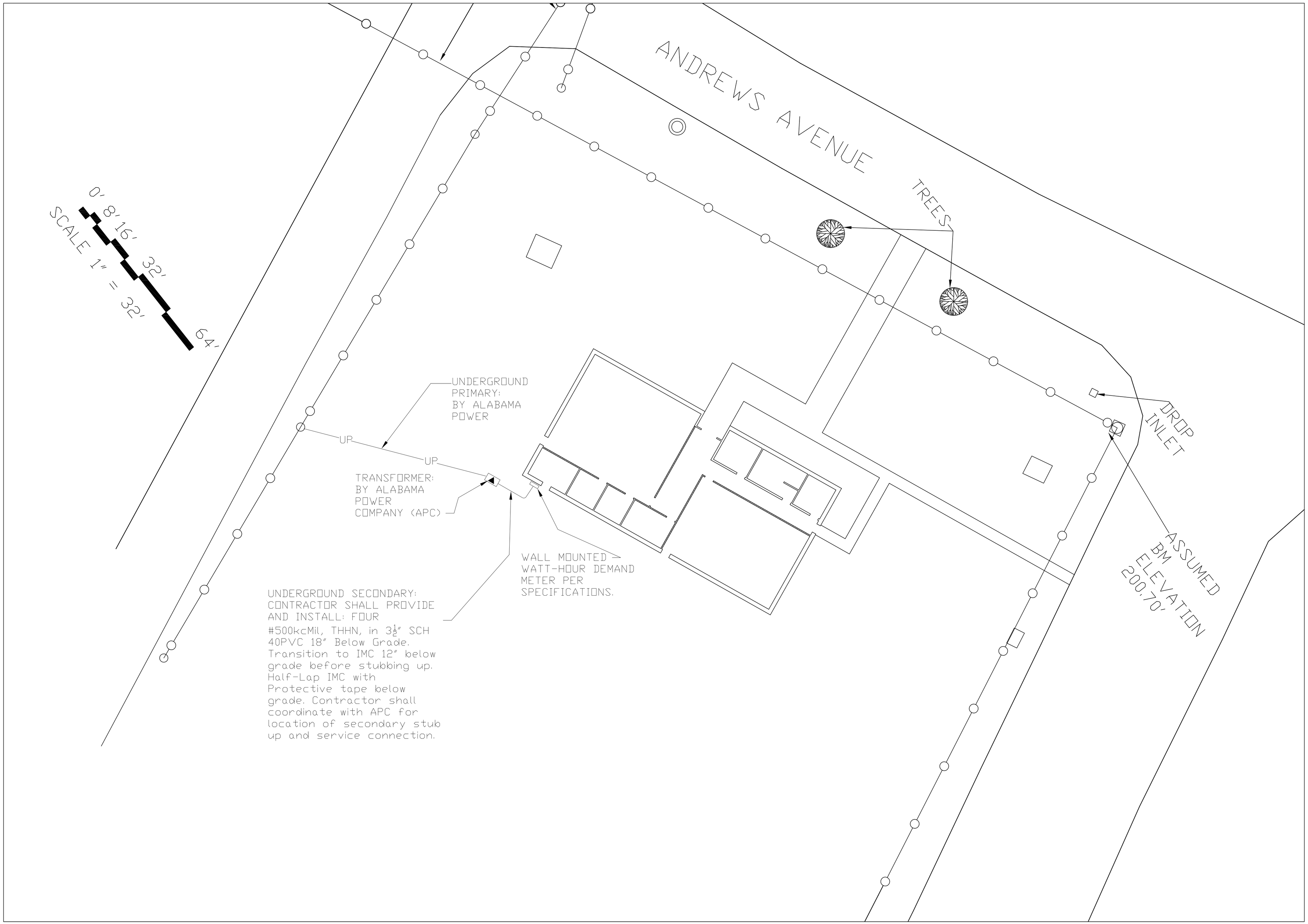

DIRECTORATE OF PUBLIC WORKS
Fort Rucker, Alabama

Symbol	No:	Description	Date	Approved
		Revisions		

Designed By: J. CURRIE	Date: DEC. 2006
Drawn By: J. CURRIE	File No.
Checked By: J. CURRIE	CADD File Name: HB 00132GJ-E1
Reviewed By: C. POWELL	Solicitation Number:

DIRECTORATE OF PUBLIC WORKS
ENGINEERING DESIGHN
FORT RUCKER, ALABAMA

HB 00132-6J

FORT RUCKER, ALABAMA
WOCC ACEDEMIC BUILDING 6012

ELECTRICAL SITE PLAN

Sheet Reference Number:

E-1

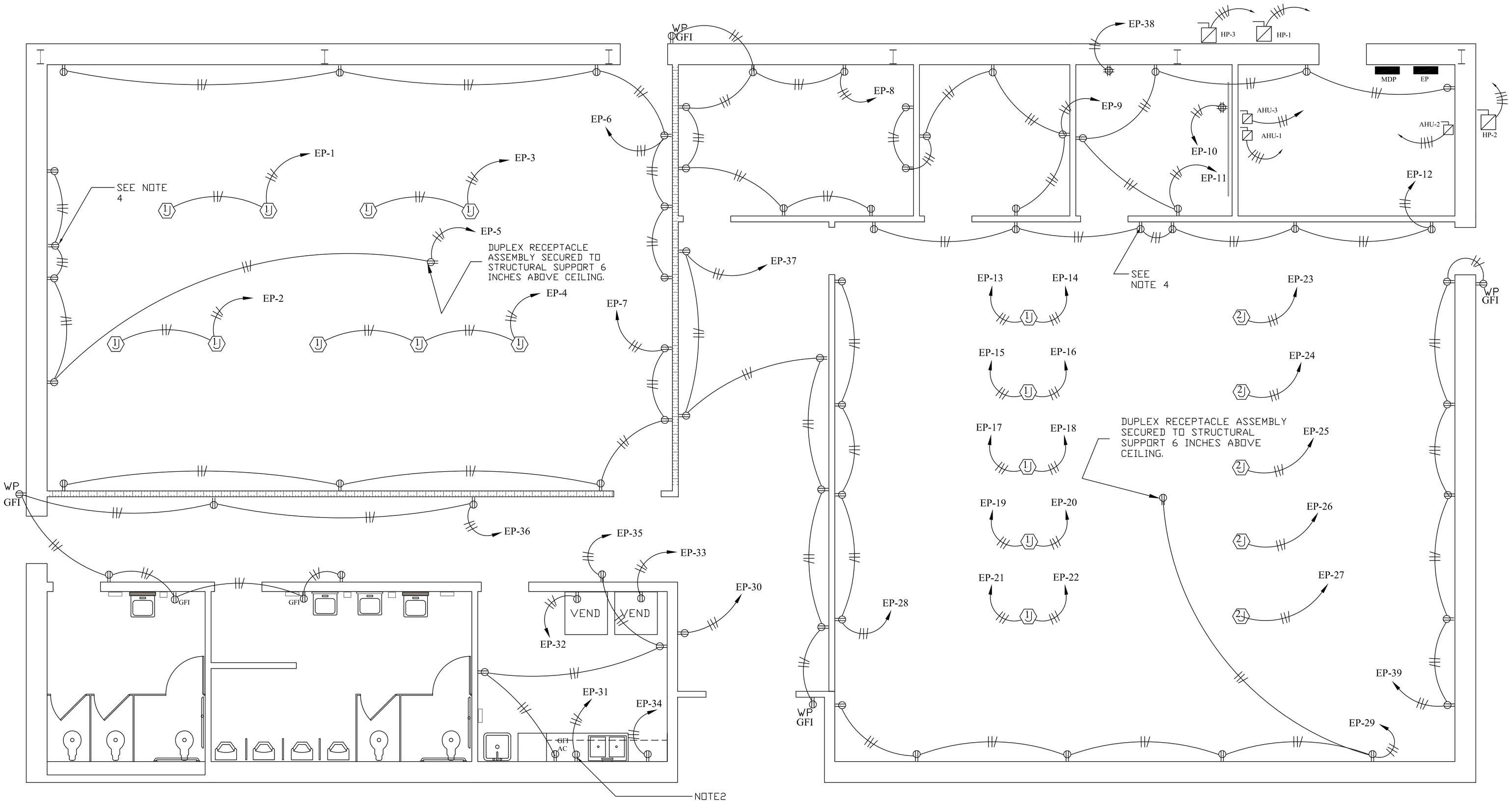

THREE #12AWG THHN IN 1/2" EMT CONDUIT UNLESS NOTED OR REQUIRED OTHERWISE BY CODE. FIXTURE WHIPS SHALL BE FMC IN LENGTHS NO LONGER THAN 6' FROM THE JUNCTION BOX. EXTERIOR FMC SHALL BE LIQUID TIGHT AND UL LISTED. TICK MARKS REPRESENT #OF CONDUCTORS. ARROWS REPRESENT HOMERUNS.

DUPLEX, NEMA 5-20R COMMERCIAL GRADE RECEPTACLE AND COVER ASSEMBLY. MOUNTED 18" AFF UNLESS OTHERWISE NOTED.

TWO DUPLEX RECEPTACLES IN TWO GANG BOX, NEMA 5-20R COMMERCIAL GRADE RECEPTACLES AND COVER ASSEMBLY. MOUNTED 18" AFF UNLESS OTHERWISE NOTED.

RECESSED FLOOR MOUNTED WIREMOLD OR EQUAL, RFB4-SS, 13 $\frac{3}{8}$"LX10"W X2 $\frac{7}{16}$"D. FOUR COMPARTMENT SHALLOW STAMPED-STEEL COMBINATION BOX WITH TWO DUPLEX RECECPTACLES. BOX SHALL ALSO HAVE BARRIER KIT (POWER/DATA) AND TWO INTERNAL COMMUNICATION BRACKETS WITH FOUR RJ-45 KNOCKOUTS IN EACH BRACKET. KNOCKOUTS SHALL BE LEFT IN (FUTURE USE) FOR ASSEMBLY ROOM 101. KNOCKOUTS SHALL BE REMOVED AND KEYSTONE TYPE RJ-45 CAT 5E SHALL BE SUPPLIED AND INSTALLED FOR INSTRUCTION ROOM 109.

FUSED DISCONNECT SIZED AND LOCATED FOR EQUIPMENT SERVED. EXTERIOR DISCONNECT SHALL BE NEMA 3R. USE ONLY UL APPROVED FLEX CONDUIT.

WP GFI — WEATHERPROOF, GROUND FAULT CIRCUIT INTERRUPT, DUPLEX, NEMA 5-20R COMMERCIAL GRADE RECEPTACLE AND COVER ASSEMBLY. MOUNTED 18" AFF UNLESS OTHERWISE NOTED. MOUNT FLUSH WHERE SHOWN ON EXTERIOR WALL.

GFI — GROUND FAULT CIRCUIT INTERRUPT, DUPLEX, NEMA 5-20R COMMERCIAL GRADE RECEPTACLE AND COVER ASSEMBLY. MOUNTED 48" AFF UNLESS OTHERWISE NOTED. "AC" REQUIRES MOUNTING 12" ABOVE COUNTER.

LP — LIGHTING/RECEPTACLE PANEL

MDP — MAIN DISTRIBUITION PANEL

RECESSED FLOOR MOUNTED WIREMOLD OR EQUAL, RFB2-SS, 13 $\frac{1}{8}$"LX6 $\frac{1}{2}$"W X2 $\frac{5}{8}$"D. TWO COMPARTMENT SHALLOW STAMPED-STEEL COMBINATION BOX WITH ONE DUPLEX RECECPTACLE. BOX SHALL ALSO HAVE BARRIER KIT (POWER/DATA) AND INTERNAL COMMUNICATION BRACKET WTIH FOUR RJ-45 CAT 5E KEYSTONE JACKS INSTALLED.

0 2' 4' 8'

SCALE: 1/4" = 1'-0"

NOTES:

1. RECEPTACLE WIRING IS SHOWN AS SCHEMATIC ONLY AND DOES NOT REPRESENT ACTUAL CONDUIT RUNS.

2. LOCATE RECEPTACLE 20" ABOVE MICROWAVE SHELF.

3. ALL CONDUIT IN CONCRETE SHALL BE INTERMEDIATE METAL CONDUIT (IMC) AND SIZED ACCORDING TO THE NATIONAL ELECTRICAL CODE.

4. CLOCK RECEPTACLE. SINGLE OUTLET WITH CLOCK OUTLET PLATE. FLUSH MOUNT 10' AFF.

DPW Engineering
Fort Rucker, Alabama

Symbol	No.	Description	Date	Approved
		Revisions		

Designed By: J. CURRIE
Drawn By: J. CURRIE
Checked By: J. CURRIE
Reviewed By: C. POWELL
Date:
File No.
CADD File Name: HB 00132-6J-E2
Solicitation Number: N/A

DIRECTORATE-PUBLIC WORKS
ENGINEERING BRANCH
FORT RUCKER, ALABAMA

HB 00132-6J

FORT RUCKER, AL
WOCC ACADEMIC BUILDING 6012

ELECTRICAL PLAN

Sheet Reference Number:
E-2

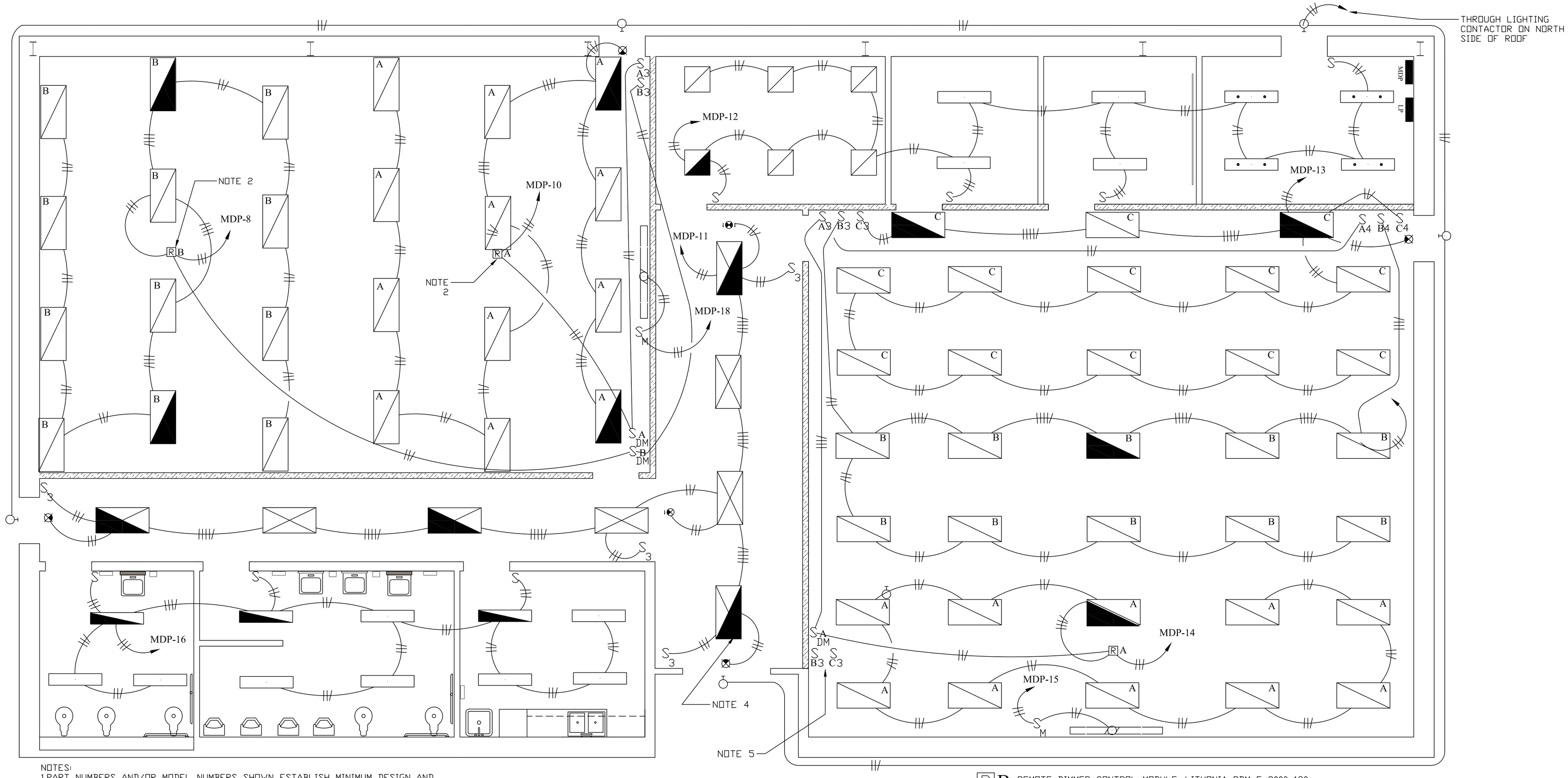

NOTES:

1.PART NUMBERS AND/OR MODEL NUMBERS SHOWN ESTABLISH MINIMUM DESIGN AND QUALITY REQUIREMENTS. COMPONENTS FROM OTHER MANUFACTURERS THAT MEET OR EXCEED THESE DESIGN AND QUALITY CRITERIA MAY BE SUBSTITUTED PENDING SUBMITTAL APPROVAL OF PROPOSED SUBSTITUTIONS.

2. REMOTE DIMMER MODULE (RDM) SHOWN MOUNTED ABOVE CEILING IN GENERAL LOCATION. FOLLOW MANUFACTURER'S SPECIFICATIONS FOR INSTALLATION. LIGHTS SHALL BE SWITCHED AS SHOWN BY LETTER. LIGHTS SHALL ALSO BE DIMMED BY LETTER. SEE LEGEND FOR SYMBOL DETAIL.

3. EACH CIRCUIT SHALL BE WIRED SEPARATELY USING EMT AND MINIMUM #12AWG THHN. MC/AC TYPE CABLE IS NOT APPROVED. WIRING SHOWN IS SCHEMATIC. USE JUNCTION BOXES AND FLEXIBLE METAL CONDUIT FOR CONNECTION TO EACH LUMINAIRE. ALL WIRING SHALL MEET INDUSTRY SAFETY STANDARDS AND CONFORM TO THE CURRENT EDITION OF THE NEC.

4. LIGHT FIXTURES WITH SOLID HATCH REPRESENT FLUORESCENT FIXTURES WITH EMERGENCY BATTERY BACKUP BALLASTS. SEE CONTRACT SPECIFICATIONS.

5. SOME LIGHITNG WIRING OMITTED TO REDUCE CONFUSION. ALL SWITCHES SHALL OPERATE RESPECTIVIE CIRCUITS DENOTED BY LETTER. ONLY FIXTURES MARKED "A" IN ROOM 109 SHALL BE DIMMED.

A LIGHTING PLAN

0 2' 4' 8'

SCALE: 1/4" = 1'-0"

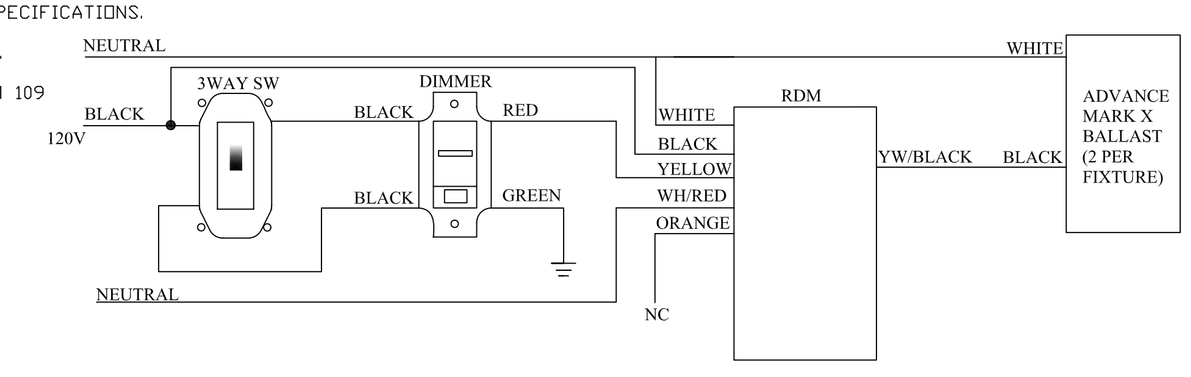

TYPICAL DIMMING CONTROL
(ROOMS 101 AND 109)

R B REMOTE DIMMER CONTROL MODULE. LITHONIA RDM F 2000 120. CONTROLLED BY DIMMER SWITCH WITH SAME LETTER SUFFIX.

S B DM WALL BOX DIMMER SWITCH. LITHONIA MODEL ISD 600 ADEZ 120

S B3 THREE WAY SWITCH. LETTER REPRESENTS FIXTURES CONTROLLED BY SWITCH.

S B4 FOUR WAY SWITCH. LETTER REPRESENTS FIXTURES CONTROLLED BY SWITCH.

S M 120VAC SWITCH SUPPLIED WITH PROJECTOR SREEN. CONTRACTOR SHALL SUPPLY WALL BOX AND CIRCUIT INSTALLATION PER MANUFACTURER'S RECOMMENDATIONS.

SEE FIXTURE SCHEDULE F

SEE FIXTURE SCHEDULE D

SEE FIXTURE SCHEDULE C

SEE FIXTURE SCHEDULE A

SEE FIXTURE SCHEDULE B

SEE FIXTURE SCHEDULE X
SINGLE OR DOUBLE FACED AND DIRECTIONAL ARROWS AS NECESSARY

SEE FIXTURE SCHEDULE E
WALL MOUNTED (12" ABOVE DOOR)

DPW Engineering
Fort Rucker, Alabama

Symbol	No:	Description	Date	Approved
		Revisions		

Designed By: J. CURRIE
Drawn By: J. CURRIE
Checked By: J. CURRIE
Reviewed By: C. POWELL
Date:
File No.
CADD File Name: HB 00132GJ-E3
Solicitation Number: N/A

DIRECTORATE-PUBLIC WORKS
ENGINEERING BRANCH
FORT RUCKER, ALABAMA

HB 00132-6J

FORT RUCKER, AL
WOCC ACADEMIC BUILDING 6012

LIGHTING PLAN

Sheet Reference Number:
E-3

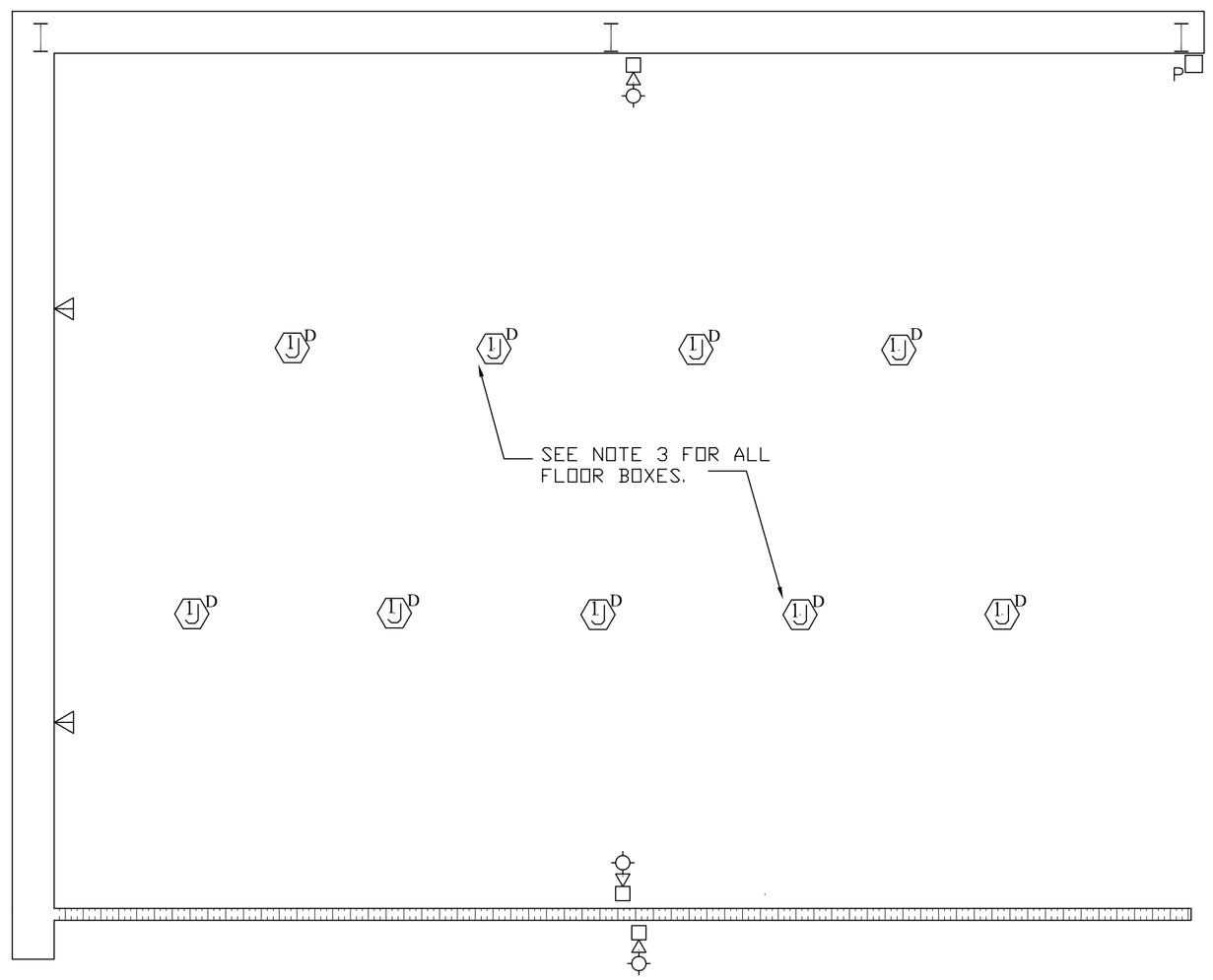

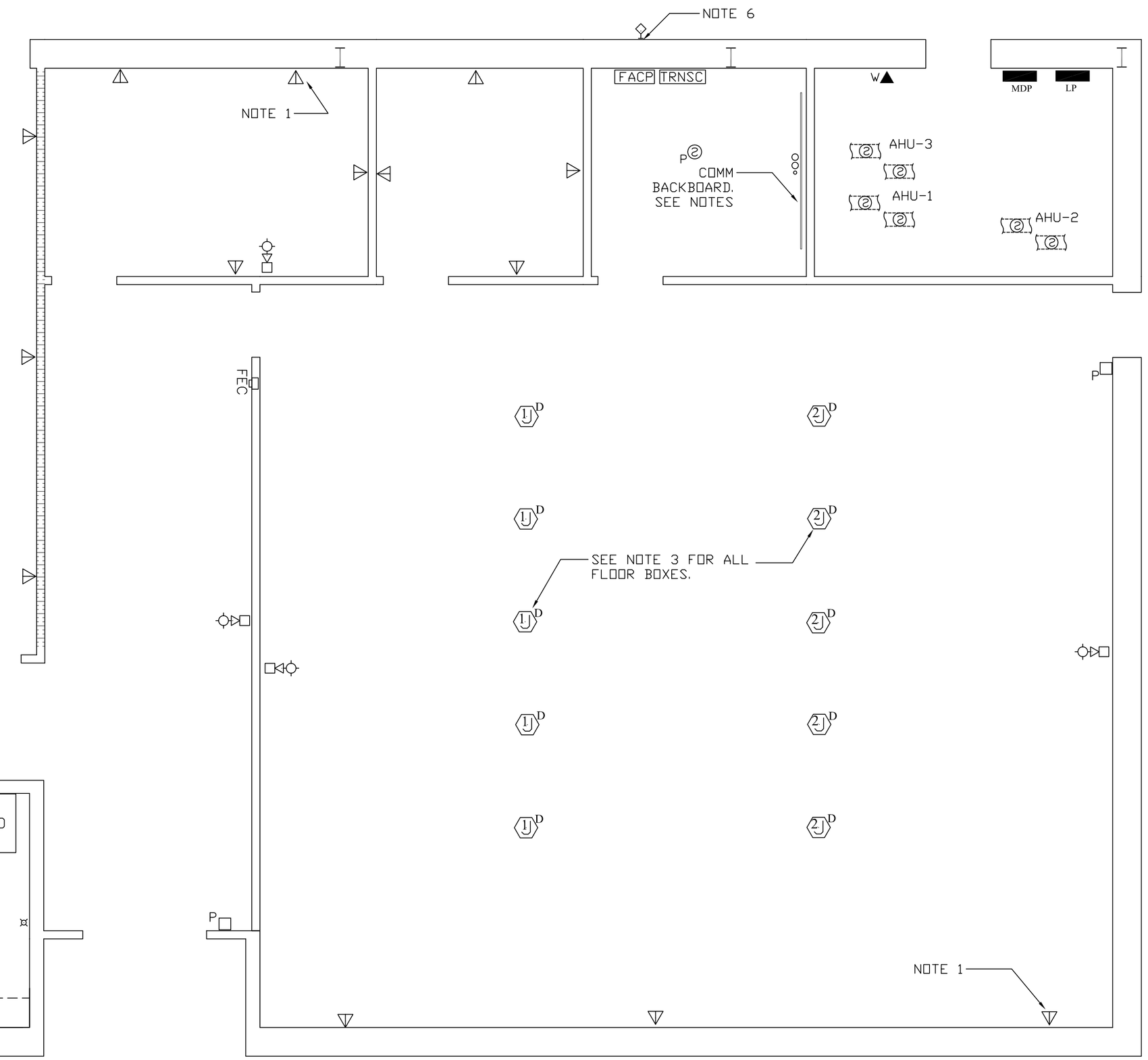

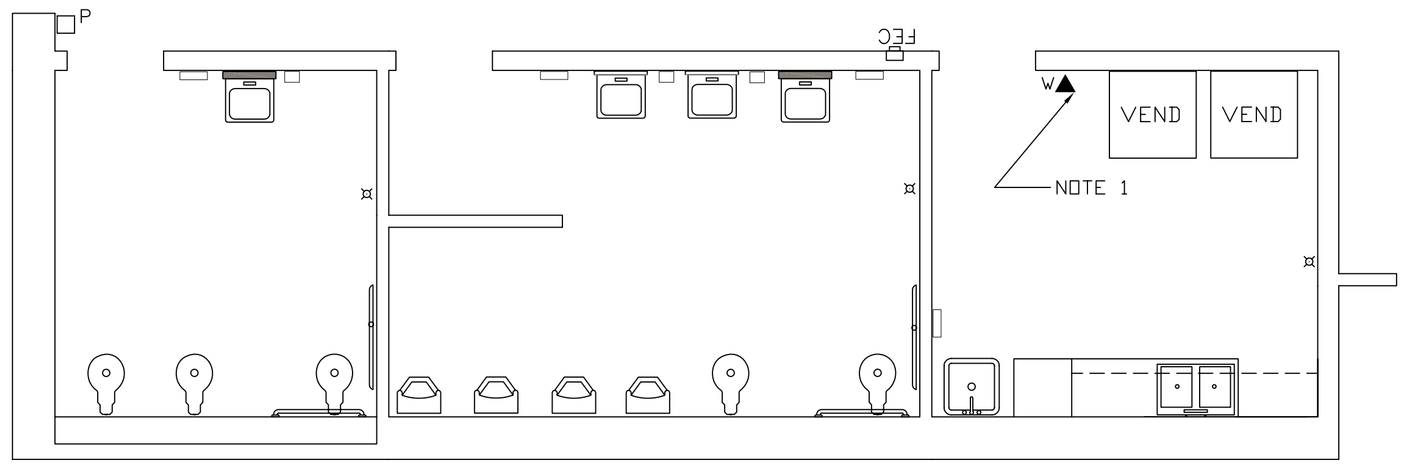

A FIRE AND TELECOMM PLAN

0 2' 4' 8'

SCALE: 1/4" = 1'-0"

FIRE EXTINGUISHER CABINET, FULL GLASS FRONT, SEMI-RECESSED 2 1/2", ROUGH OPENING 25"X10 1/2"X4" MOUNT 40" AFF PROVIDE 10LB. PORTABLE FIRE EXTINGUISHER, 4A 60-B:C RATING,

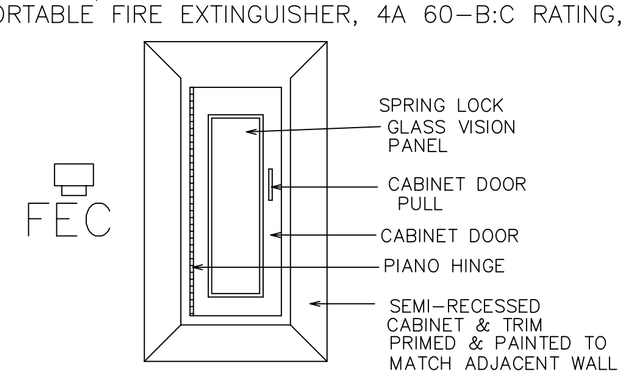

FIRE EXTINGUISHER CABINET ELEVATION

FIRE DETECTION

- COMBINATION HORN/STROBE: MOUNT AS SPECIFIED
- STROBE: MOUNT AS SPECIFIED
- P MANUAL PULL STATION – 48" AFF
- P SMOKE DETECTOR, CEILING MOUNTED,
- DUCT SMOKE DETECTOR
- FACP FIRE ALARM CONTROL PANEL
- TRNSC MONACO TRANSCEIVER PER FT. RUCKER STANDARD
- TRANSCEIVER ANTENNA

FIRE SAFETY NOTES:
1. AHU SHUT DOWN RELAYS AND CONNECTIONS ARE NOT SHOWN BUT SHALL BE PROVIDED PER NFPA REQUIREMENTS.
2. PROVIDE LOCKABLE CB AT PANEL FOR FACP.

- W SINGLE TELEPHONE OUTLET. RJ-45 JACK AND WALL PLATE WITH FLUSH BOX. MOUNT 60"AFF.
- TWO CAT 5E KEYSTONE RJ-45 JACKS IN FLUSH MOUNTED WALL BOX. MOUNT 18" AFF. SEE NOTES.
- U D WIREMOLD OR EQUAL, RFB4-SS, 13 $\frac{5}{8}$"LX10"W X2 $\frac{7}{16}$"D. FOUR COMPARTMENT SHALLOW STAMPED-STEEL COMBINATION BOX WITH TWO DUPLEX RECECPTACLES. BOX SHALL ALSO HAVE BARRIER KIT (POWER/DATA) AND TWO INTERNAL COMMUNICATION BRACKETS WITH FOUR RJ-45 KNOCKOUTS IN EACH BRACKET. KNOCKOUTS SHALL BE LEFT IN (FUTURE USE) FOR ASSEMBLY ROOM 101. KNOCKOUTS SHALL BE REMOVED AND KEYSTONE TYPE RJ-45 CAT 5E SHALL BE CONTRACTOR SUPPLIED AND INSTALLED FOR INSTRUCTION ROOM 109.
- 2 D WIREMOLD OR EQUAL, RFB2-SS, 13 $\frac{1}{8}$"LX6 $\frac{1}{2}$"W X2 $\frac{5}{8}$"D. TWO COMPARTMENT SHALLOW STAMPED-STEEL COMBINATION BOX WITH ONE DUPLEX RECECPTACLE. BOX SHALL ALSO HAVE BARRIER KIT (POWER/DATA) AND INTERNAL COMMUNICATION BRACKET WTIH FOUR RJ-45 CAT 5E KEYSTONE JACKS CONTRACTOR SUPPLIED AND INSTALLED.

NOTES:

1. USE 4-11/16"X4-11/16"X2-1/2" RECESSED IN WALL. PROVIDE SINGLE DEVICE EXTENSION RING FLUSH WITH WALL FINISH. PROVIDE 1" EMT FROM THE OUTLET BOX RECESSED IN THE WALL CAVITY, THRU TOP OF WALL AND STUBBED OUT ABOVE CEILING WITH SWEEPING TURN. INSTALL PLASTIC BUSHING ON CONDUIT ENDS TO PROTECT CABLE AGAINST ABRASION. TYPICAL FOR ALL LOCATIONS.

2. CONTRACTOR SHALL INSTALL 4'HX8'L, 3/4" PLYWOOD FOR COMMUNICATIONS BACKBOARD OVER 5/8" GYPSUM.

3. DATA CONDUIT IN CONCRETE SHALL BE IMC. SIZES AND CONNECTIONS SHALL BE PER NEC AND FT. RUCKER DIRECTORATE OF INFORMATION MANAGEMENT STANDARDS AND APPLICABLE EIA/ITA RECOMMENDATIONS. DATA CONDUIT SHALL COURSE THROUGH NEAREST WALL AND SHALL BE STUBBED OUT ABOVE CEILING WITH SWEEPING TURN. INSTALL PLASTIC BUSHING ON CONDUIT ENDS. PROVIDE PULLING TAPE IN EACH CONDUIT FOR WIRING BY OTHERS.

4. INSTALL TWO-4" AND ONE-2" UNDERGROUND SCH40 PVC DUCTS TO TELECOM ROOM,. DUCTS TO BE STUBBED OUT 5' FROM BUILDING AND 4"-6" AFF IN TELECOM ROOM.

5. PROVIDE A GROUND ATTACHMENT IN TELECOM ROOM. Grounding of the Telecommunications Building Bond (TBB) shall be a copper conductor. The minimum TBB Conductor size shall be a No. 6 AWG. The TBB should be sized at 2kcmil per linear foot of conductor length up to a maximum size of 3/0 AWG. The TBB may be insulated. If the TBB is insulated, the insulation shall meet the fire ratings of its pathway. PROPERLY BOND TBB TO BUILDING GROUNDING ELECTRODE SYSTEM. PROVIDE 10' SLACK FOR CONNECTION TO TELECOM EQUIPMENT GROUND BUS BAR.

6. INSTALL ANTENNA FOR MONACO FIRE ALARM SYSTEM ON WALL. INSTALL IN STRICT ACCORDANCE WITH MANUFACTURERS WRITTEN INSTRUCTIONS. USE WALL MOUNTING BRACKETS AND STANDOFFS AS NECESSARY. DO NOT PENETRATE ROOF.

DPW Engineering
Fort Rucker, Alabama

Symbol	No.	Description	Date	Approved
		Revisions		

Designed By: J. CURRIE
Drawn By: J. CURRIE
Checked By: J. CURRIE
Reviewed By: C. POWELL
Date:
File No.
CADD File Name: HB 00132GJ-E4
Solicitation Number: N/A

DIRECTORATE-PUBLIC WORKS
ENGINEERING BRANCH
FORT RUCKER, ALABAMA
HB 00132-6J

FORT RUCKER, AL
WOCC ACADEMIC BUILDING 6012
FIRE SAFETY AND COMMUNICATIONS PLAN

Sheet Reference Number:
E-4

GROUNDING/BONDING NOTES:

1.GROUNDING AND BONDING SHALL BE IN ACCORDANCE WITH NEC 2005 ARTICLE 250. GROUNDING ELECTRODE SYSTEM SHALL BE IN ACCORDANCE WITH 250.50 AND METAL WATER PIPING SHALL BE BONDED AS REQUIRED IN NEC ARTICLE 250.104. CONTRACTOR SHALL COORDINATE CRAFTS WITH CONSTRUCTION PHASES TO COMPLY.

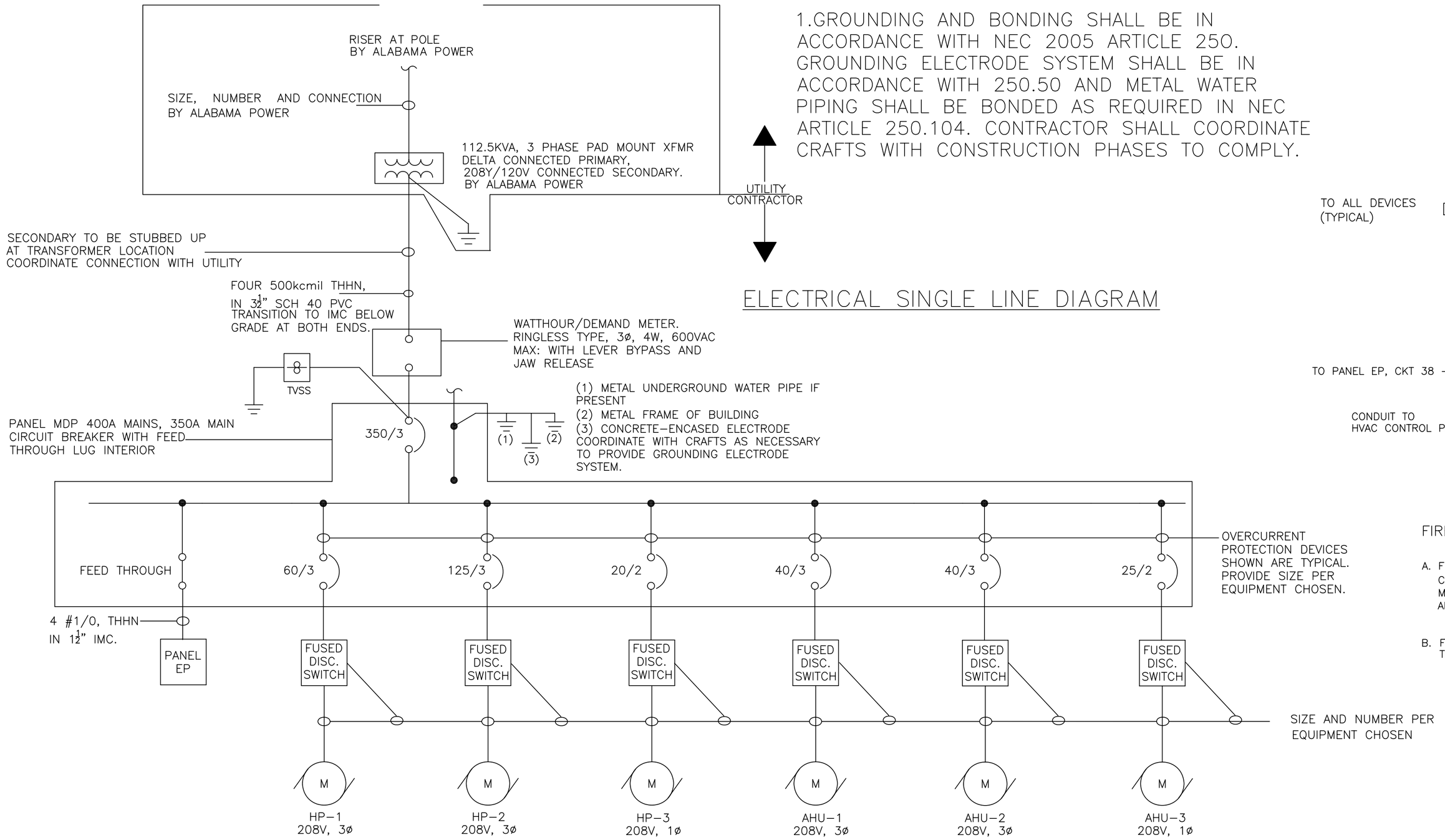

ELECTRICAL SINGLE LINE DIAGRAM

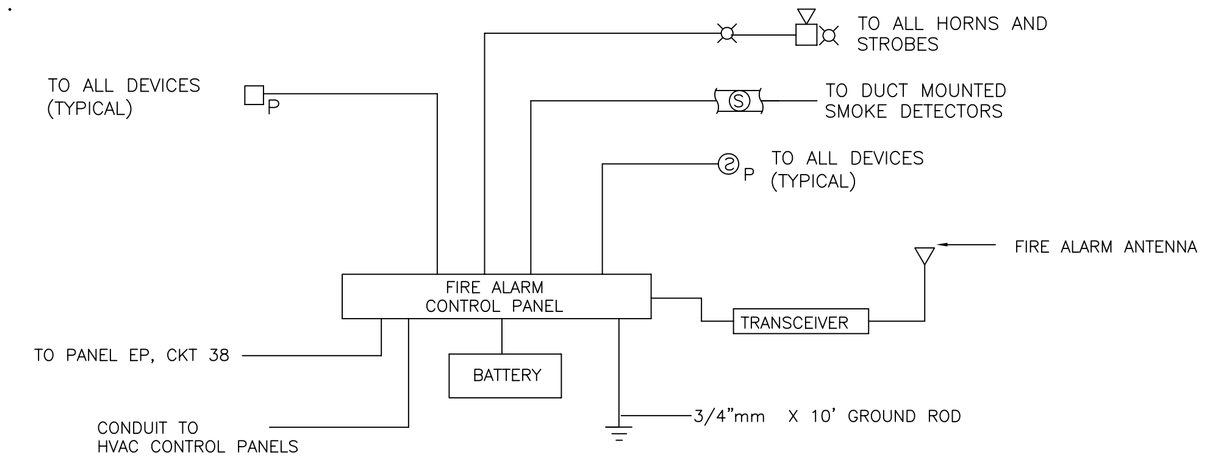

FIRE ALARM RISER DIAGRAM

NOT TO SCALE

FIRE ALARM GENERAL NOTES:

A. FIRE ALARM CONDUITS SHALL BE SIZED AS REQUIRED BY CONDUCTOR COUNT TO PERFORM SPECIFIC FUNCTIONS AND MANUFACTURER DIRECTIONS. F.A. PANEL SHALL SHUT DOWN ALL HVAC EQUIPMENT UPON INITIATION OF ALARM.

B. FIRE ALARM TERMINAL CABINETS SHALL BE EQUIPPED WITH TERMINAL STRIPS AND PAINTED RED.

VOLTAGE: 208V 3ø, 4W
TYPE/RATING: 400A MAINS, 350A MAIN BREAKER
FEED THROUGH LUG INTERIOR

PANEL SCHEDULE
MARK: MDP

INTEGRATED EQUIPMENT
SHORT CIRCUIT RATING: 25KAIC

EQUIPMENT SERVED	CKT. BREAKER		VA/PHASE			CKT NO.	CKT NO.	VA/PHASE			CKT. BREAKER		EQUIPMENT SERVED (WIRE SIZE)
	POLE	TRIP	1	2	3			1	2	3	TRIP	POLE	
AHU-1	3					1	2					3	AHU-2
						3	4						
						5	6						
AHU-3	2					7	8					3	HP-2
						9	10						
HP-1	3					11	12						
						13	14	560			20	1	FLUOR LIGHTS ROOM 101
						15	16		560		20	1	FLUOR LIGHTS ROOM 101
HP-3	2					17	18			900	20	1	LIGHTS Rm 102,03,04,05
						19	20	560			20	1	FLUOR LIGHTS ROOM 109
CORRIDOR LIGHTING	1	20		464		21	22		1000		20	1	LIGHTS RM 106,07,08
FLUOR LIGHTS ROOM 109	1	20			560	23	24			1200	20	1	MOTORIZED SCREEN 101
MOTORIZED SCREEN 109	1	20	1200			25	26				20	1	SPARE
EXTERIOR LIGHTING	1	20		500		27	28				20	1	SPARE
SPARE	1	20				29	30						
SPARE	1	20				31	32						
						33	34						
						35	36						
						37	38						
						39	40						
						41	42						

VOLTAGE: 208V 3ø, 4W
TYPE/RATING: 225A MAINS, 150A MAIN BREAKER

PANEL SCHEDULE
MARK: EP

INTEGRATED EQUIPMENT
SHORT CIRCUIT RATING: 25KAIC

EQUIPMENT SERVED	CKT. BREAKER		VA/PHASE			CKT NO.	CKT NO.	VA/PHASE			CKT. BREAKER		EQUIPMENT SERVED (WIRE SIZE)
	POLE	TRIP	1	2	3			1	2	3	TRIP	POLE	
FLOOR BOX RECEP	1	20	600			1	2	600			20	1	FLOOR BOX RECEP
FLOOR BOX RECEP	1	20		600		3	4		600		20	1	FLOOR BOX RECEP
ROOM 101 RECEP	1	20			1020	5	6			1080	20	1	RECEP ROOM 101
RECEP ROOM 101	1	20	900			7	8	1080			20	1	RECEP ROOM 102
RECEP ROOM 103	1	20		1080		9	10		1200		20	1	RECEP ROOM 104
RECEP ROOM 104	1	20			900	11	12			900	20	1	RECEP ROOM 109
FLOOR BOX RECEP	1	20	1200			13	14	1200			20	1	FLOOR BOX RECEP
FLOOR BOX RECEP	1	20		1200		15	16		1200		20	1	FLOOR BOX RECEP
FLOOR BOX RECEP	1	20			1200	17	18			1200	20	1	FLOOR BOX RECEP
FLOOR BOX RECEP	1	20	1200			19	20	1200			20	1	FLOOR BOX RECEP
FLOOR BOX RECEP	1	20		1200		21	22		1200		20	1	FLOOR BOX RECEP
FLOOR BOX RECEP	1	20			1200	23	24			1200	20	1	FLOOR BOX RECEP
FLOOR BOX RECEP	1	20	1200			25	26	1200			20	1	FLOOR BOX RECEP
FLOOR BOX RECEP	1	20		1200		27	28		720		20	1	RECEP ROOM 109
RECEP ROOM 109	1	20			1380	29	30			1200	20	1	RECEP EWC
BREAK ROOM MICROWAVE	1	20	1400			31	32	1520			20	1	BREAK ROOM VEND
BREAK ROOM VEND	1	20		1520		33	34		1400		20	1	BREAK ROOM RECEP
BREAK ROOM RECEP	1	20			900	35	36			1260	20	1	CORRIDOR/LATRENE RECEP
CORRIDOR 110 RECEP	1	20	1080			37	38	1200			20	1	FACP *
RECEP ROOM 109	1	20		1080		39	40				20	1	SPARE
SPARE	1	20				41	42				20	1	SPARE

EWC – ELECTRIC WATER COOLER
* KEY LOCK BREAKER

DPW
Engineering
Fort Rucker, Alabama

Revisions

Symbol	No.	Description	Date	Approved

Designed By: J. CURRIE
Drawn By: J. CURRIE
Checked By: J. CURRIE
Reviewed By: C. POWELL
Date:
File No.
CADD File Name: HB 00132GJ-E5
Solicitation Number: N/A

DIRECTORATE-PUBLIC WORKS
ENGINEERING BRANCH
FORT RUCKER, ALABAMA
HB 00132-6J

FORT RUCKER, AL
WOCC ACADEMIC BUILDING 6012
ONE LINE
PANEL SCHEDULE

Sheet Reference Number:
E-5

LIGHTING FIXTURE SCHEDULE

CONTRACT DRAWING FIXTURE SYMBOL	LAMP QTY.	LAMP TYPE	MAX WATT	VOLT	FIXTURE DESCRIPTION	NOTE NO.
A	2	F32T8/U6	32	120V	2' X 2' RECESSED PARABOLIC TROFFER	1
B	2	F32T8	32	120V	4' CHAIN HUNG TURRET INDUSTRIAL FLUORESCENT	1,2,4
C	4	F32T8	32	120V	2' X 4' RECESSED PARABOLIC TROFFER	1
D	3	F32T8	32	120V	1' X 4' SURFACE MOUNTED LENSED TROFFER	1
E	1	MH	100	120V	METAL HALIDE WALL PACK	1,5
F	2	F32T8	32	120V	2' X 4' RECESSED PARABOLIC TROFFER	1
X	–	L.E.D.	7.5	120V	EXIT LIGHT WITH BATTERY	1

NOTES:
1. SEE DETAIL THIS SHEET.
2. MOUNT 10' ABOVE FINISHED FLOOR.

4. COORDINATE FIXTURE LOCATION WITH MECHANICAL EQUIPMENT.
5. MOUNT 12" ABOVE DOOR.

TYPE: LITHONIA LES (1) (2) R 120/277

FEATURES
LAMP TYPE: LED
MOUNTING: UNIVERSAL
SHIELDING: FLAT SHEET ACRYLIC
LETTERS: RED

OPTIONS

NOM. DIMENSIONS 11 3/8 " W X 7 7/8 " H X 1 3/4 " D

GENERAL DESCRIPTION
HOUSING: DIE–CAST ALUMINUM OR 20 GA. COLD ROLLED STEEL, HARDWARE FINISH TO MATCH HOUSING FINISH. 152 mm (6") H LETTERS WITH 19 mm (3/4") STROKE. DIRECTIONAL ARROWS AS REQUIRED

ELECTRICAL: 120 VOLT

FINISH: BLACK

OTHER: MINIMUM BRIGHTNESS 20 CD/SQ METER ON FACE OF SIGN.

LED STENCIL FACE EXIT SIGN
DETAIL – FIXTURE "X"
NOT TO SCALE

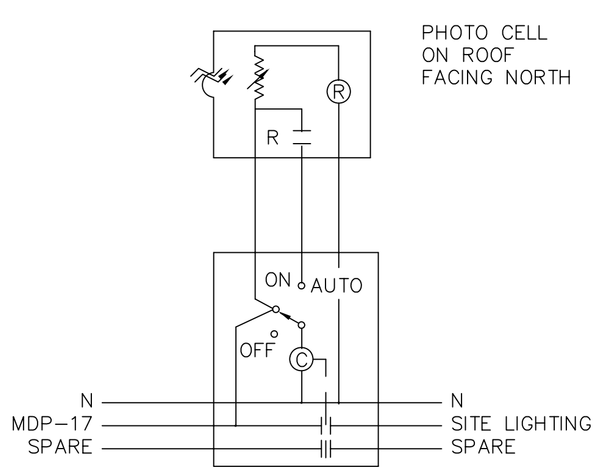

LIGHTING CONTROL WIRING DIAGRAM
NOT TO SCALE

TYPE: LITHONIA 2PM32U316 16LD TUBI OR EQUIV.

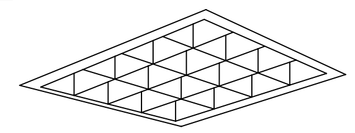

FEATURES
LAMP TYPE: F32T8/U/6/ 75 CRI
PROFILE: 2 LAMP
SHIELDING: 76 (3") DEEP, 16 CELL SEMI–SPECULAR, LOW IRIDESCENT PARABOLIC LOUVER
BALLAST: ELECTRONIC

NON AIR HANDLING TROFFER

NOM. DIMENSIONS 2' W X 2' L X 6" D

GENERAL DESCRIPTION
HOUSING: COLD ROLLED STEEL, FLANGE TO COORDINATE WITH CEILING

MOUNTING: RECESSED INTO STANDARD NON METRIC GRID

REFLECTORS: HIGH REFLECTANCE GLOSS WHITE

ELECTRICAL: 120 VOLT BALLAST

RECESSED PARABOLIC 2'X2' FLUORESCENT TROFFER
DETAIL – FIXTURE "A"
NOT TO SCALE

TYPE: LITHONIA TWR1S 100M

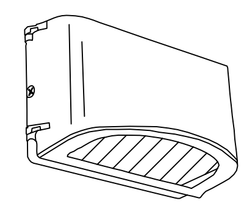

FEATURES
LAMP TYPE: 100W METAL HALIDE
PROFILE: 1 LAMP
SHIELDING: TEMPERED GLASS LENS FULL CUT–OFF DISTRIBUTION
BALLAST: HIGH POWER FACTOR,

NOM. DIMENSIONS 14.375" L X 9.375" H X 8.75" D

GENERAL DESCRIPTION
HOUSING: DIE CAST ALUMINUM HOUSING, DOOR ASSEMBLY AND BACKPLATE

MOUNTING: DIE CAST ALUMINUM BACKPLATE WITH CAST-IN KNOCKOUTS FOR MOUNTING HOLE ALIGNMENT.

REFLECTORS: SPECULAR ANODIZED ALUMINUM

ELECTRICAL: 120 VOLT

FINISH: BAKED–ON POLYURETHANE POWDER COAT PAINT

METAL HALIDE WALL PACK
DETAIL – FIXTURE "E"
NOT TO SCALE

TYPE: LITHONIA 2PM3232 12LD TUBI OR EQUIV.

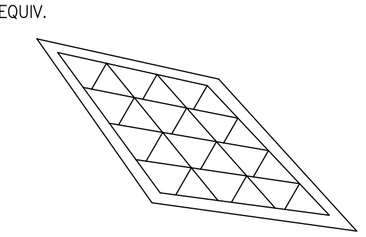

FEATURES
LAMP TYPE: F32T8/75 CRI
PROFILE: 2 LAMP
SHIELDING: 76 (3") DEEP, 12 CELL SEMI–SPECULAR, LOW IRIDESCENT PARABOLIC LOUVER
BALLAST: ELECTRONIC

NON AIR HANDLING TROFFER

NOM. DIMENSIONS 2' W X 4' L X 6" D

GENERAL DESCRIPTION
HOUSING: COLD ROLLED STEEL, FLANGE TO COORDINATE WITH CEILING

MOUNTING: RECESSED INTO STANDARD NON METRIC GRID

REFLECTORS: HIGH REFLECTANCE GLOSS WHITE

ELECTRICAL: 120 VOLT BALLAST

RECESSED PARABOLIC 2'X4' FLUORESCENT TROFFER
DETAIL – FIXTURE "F"
NOT TO SCALE

TYPE: LITHONIA EJS232120WGL OR EQUIV

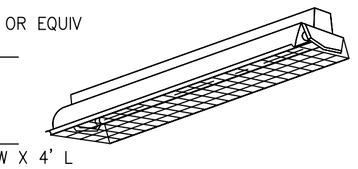

FEATURES
LAMP TYPE: F32T8/75 CRI
PROFILE: 2 LAMP
SHIELDING: WIRE GUARD
BALLAST: ELECTRONIC

NOM. DIMENSIONS 4 1/4" H X 12" W X 4' L

GENERAL DESCRIPTION
HOUSING: DIE–FORMED CRS HOUSING WITH ROLLED SYMMETRIC REFLECTOR/BALLAST COVER

REFLECTORS: COLD ROLLED STEEL, PAINTED WHITE, NO UPLIGHT

ELECTRICAL: 120 VOLT BALLAST

FINISH: WHITE ENAMEL POLYESTER POWDER COAT

CHAIN HUNG 4' TURRET INDUSTRIAL FLUORESCENT
DETAIL – FIXTURE "B"
NOT TO SCALE

TYPE: LITHONIA 2PM3NGNB432 12LD 1/4 TUBI

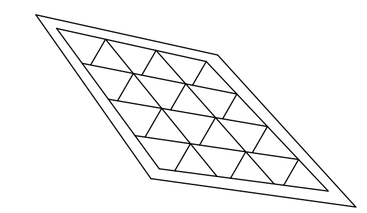

FEATURES
LAMP TYPE: F32T8/75 CRI
PROFILE: 4 LAMP
SHIELDING: 76 (3") DEEP, 12 CELL SEMI–SPECULAR, LOW IRIDESCENT PARABOLIC LOUVER
BALLAST: ELECTRONIC

NON AIR HANDLING TROFFER

NOM. DIMENSIONS 2' W X 4' L X 6" D

GENERAL DESCRIPTION
HOUSING: COLD ROLLED STEEL, FLANGE TO COORDINATE WITH CEILING

MOUNTING: RECESSED INTO STANDARD NON METRIC GRID

REFLECTORS: HIGH REFLECTANCE GLOSS WHITE

ELECTRICAL: 120 VOLT BALLAST

RECESSED PARABOLIC 2'X4' FLUORESCENT TROFFER
DETAIL – FIXTURE "C"
NOT TO SCALE

TYPE: LITHONIA MODUALAR M332A12 1/3 TUBI OR EQUIV

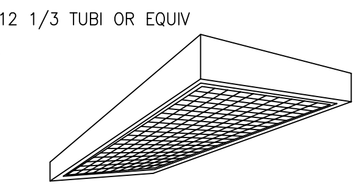

FEATURES
LAMP TYPE: F32T8/75 CRI
PROFILE: 3 LAMP
SHIELDING: PRISMATIC LENS, #12
BALLAST: ELECTRONIC

NOM. DIMENSIONS 12" W X 4' L X 4" D

GENERAL DESCRIPTION
HOUSING: COLD ROLLED STEEL WITH NO VISIBLE HOLES OR KNOCKOUTS; WITH BAKED WHITE ENAMEL AND SPRING LOADED LATCHES.
REFLECTORS: GLOSS WHITE

ELECTRICAL: 120 VOLT BALLAST

FINISH: BAKED WHITE ENAMEL OR POLYESTER POWDER COAT

EFFICIENCY: 60%

SURFACE MOUNTED LENSED 1' X 4' TROFFER
DETAIL – FIXTURE "D"
NOT TO SCALE

DPW Engineering
Fort Rucker, Alabama

Symbol	No:	Description	Date	Approved
		Revisions		

Date:
File No.
CADD File Name: HB 00132GJ–E6
Solicitation Number: N/A
Designed By: J. CURRIE
Drawn By: J. CURRIE
Checked By: J. CURRIE
Reviewed By: C. POWELL

DIRECTORATE–PUBLIC WORKS
ENGINEERING BRANCH
FORT RUCKER, ALABAMA

HB 00132–6J

FORT RUCKER, AL
WOCC ACADEMIC BUILDING 6012

LIGHTING FIXTURE SCHEDULE

Sheet Reference Number:
E–6

GENERAL CONTRACTOR SHALL INSTALL SPRINKLER WATER SUPPLY TO AND INCLUDING THE POST INDICATOR VALVE (PIV) AND SHALL PROVIDE A TEMPORARY CAP TO KEEP DEBRI OUT OF THE PIV. AWE WILL CONNECT FROM THE PIV TO THE MAIN WATER SUPPLY.

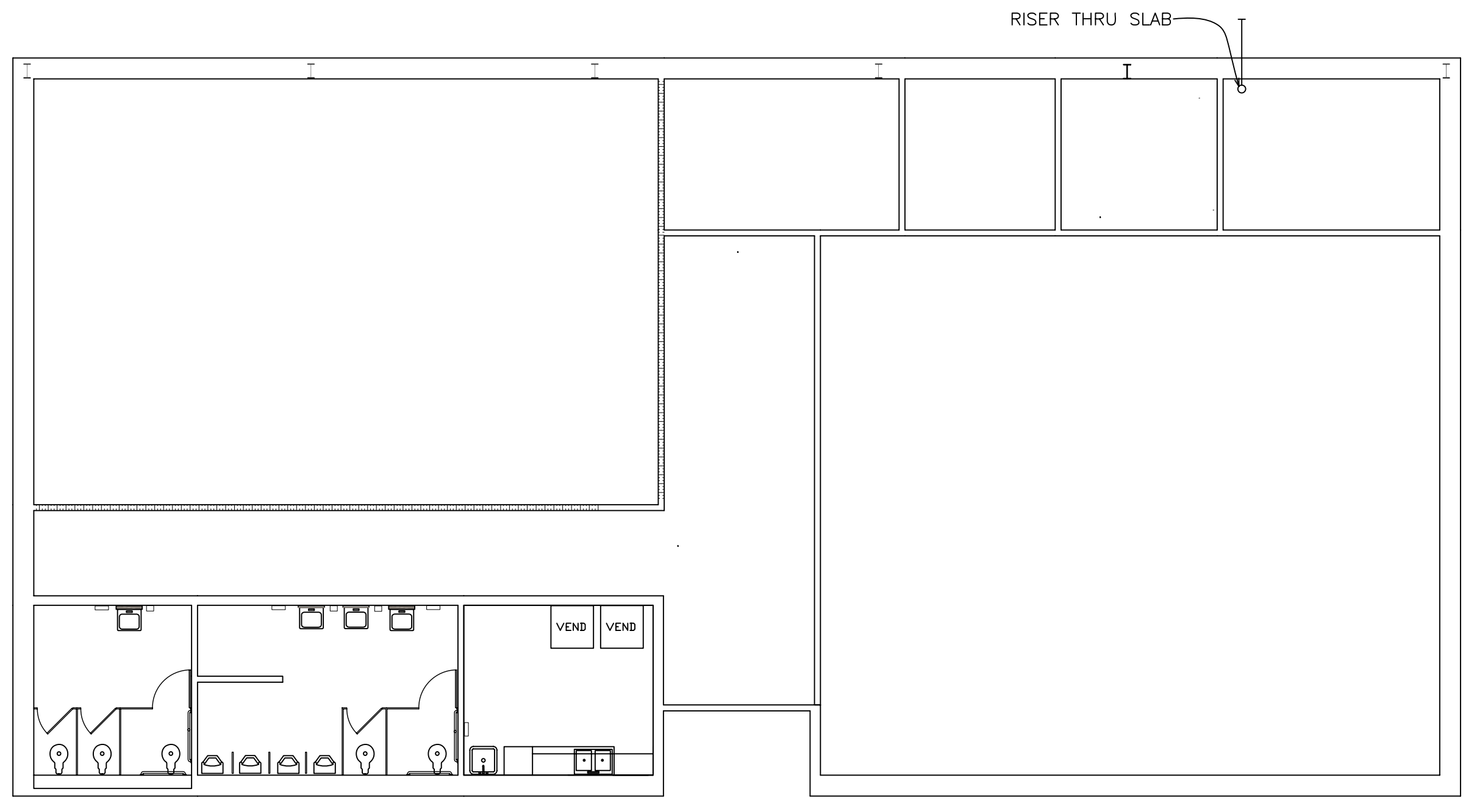

FIRE SUPPRESSION.

1. PROVIDE A FIRE DETECTION/SUPPRESSION SYSTEM THAT MEETS OSHA REGULATIONS, NFPA CODES AND UNIFIED FACILITY CRITERIA 3-600-01. DESIGN OF THE SPRINKLER SYSTEM SHALL BE IN ACCORDANCE WITH UNIFIED FACILITY CRITERIA 3-600-01, NFPA 13, AND AS SPECIFIED HEREIN.

2. FIRE EXTINGUISHER CABINETS SHALL BE FURNISHED AS PART OF THE CONSTRUCTION AND SHALL BE LOCATED WHERE REQUIRED BY NFPA REQUIREMENTS. EACH CABINET SHALL INCLUDE ONE 10 POUND A-B-C EXTINGUISHER. FIRE EXTINGUISHER CABINETS SHALL BE OF THE RECESSED OR SEMI-RECESSED TYPE (RECESSED WHERE EVER POSSIBLE), TEMPERED GLASS FACED, AND BRUSHED ALUMINUM FINISH. THE CABINETS SHALL BE INSTALLED SUCH THAT THE TOP OF THE CABINET IS 54 INCHES ABOVE THE FINISHED FLOOR.

3. DETAIL DRAWINGS SHALL CONFORM TO THE REQUIREMENTS ESTABLISHED FOR WORKING PLANS AS PRESCRIBED IN NFPA 13. ALL CONTRACT REQUIREMENTS THAT EXCEED THE MINIMUM REQUIREMENTS OF NFPA 13 SHALL BE INCORPORATED INTO THE DESIGN. THE CONTRACTOR'S SUBMITTAL SHALL BE PREPARED AND SEALED BY A REGISTERED FIRE PROTECTION ENGINEER OR A REGISTERED PROFESSIONAL ENGINEER WITH A FIRE PROTECTION BACKGROUND AND WHO HAS HAD AT LEAST FOUR YEARS EXPERIENCE IN FIRE PROTECTION/DETECTION DESIGN. QUALIFICATIONS SHALL BE SUBMITTED TO AND APPROVED BY THE CONTRACTING OFFICER'S REPRESENTATIVE.

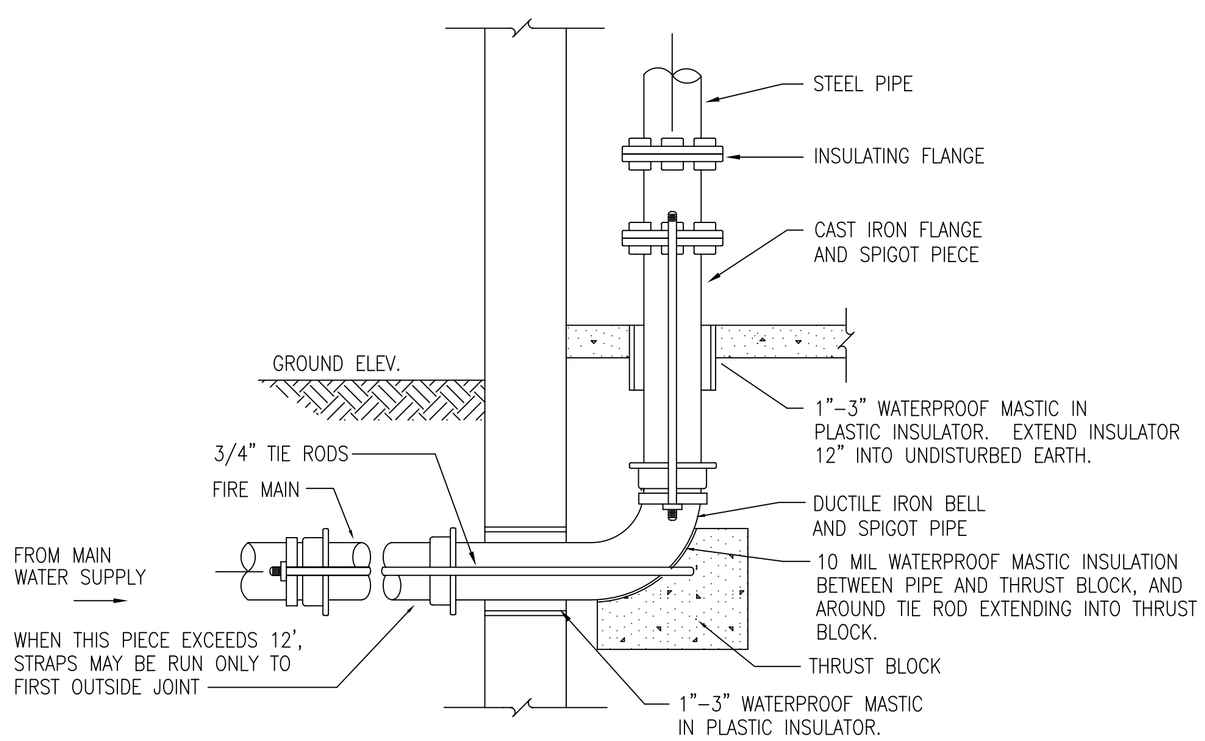

UNDERGROUND PIPING DETAIL
NOT TO SCALE

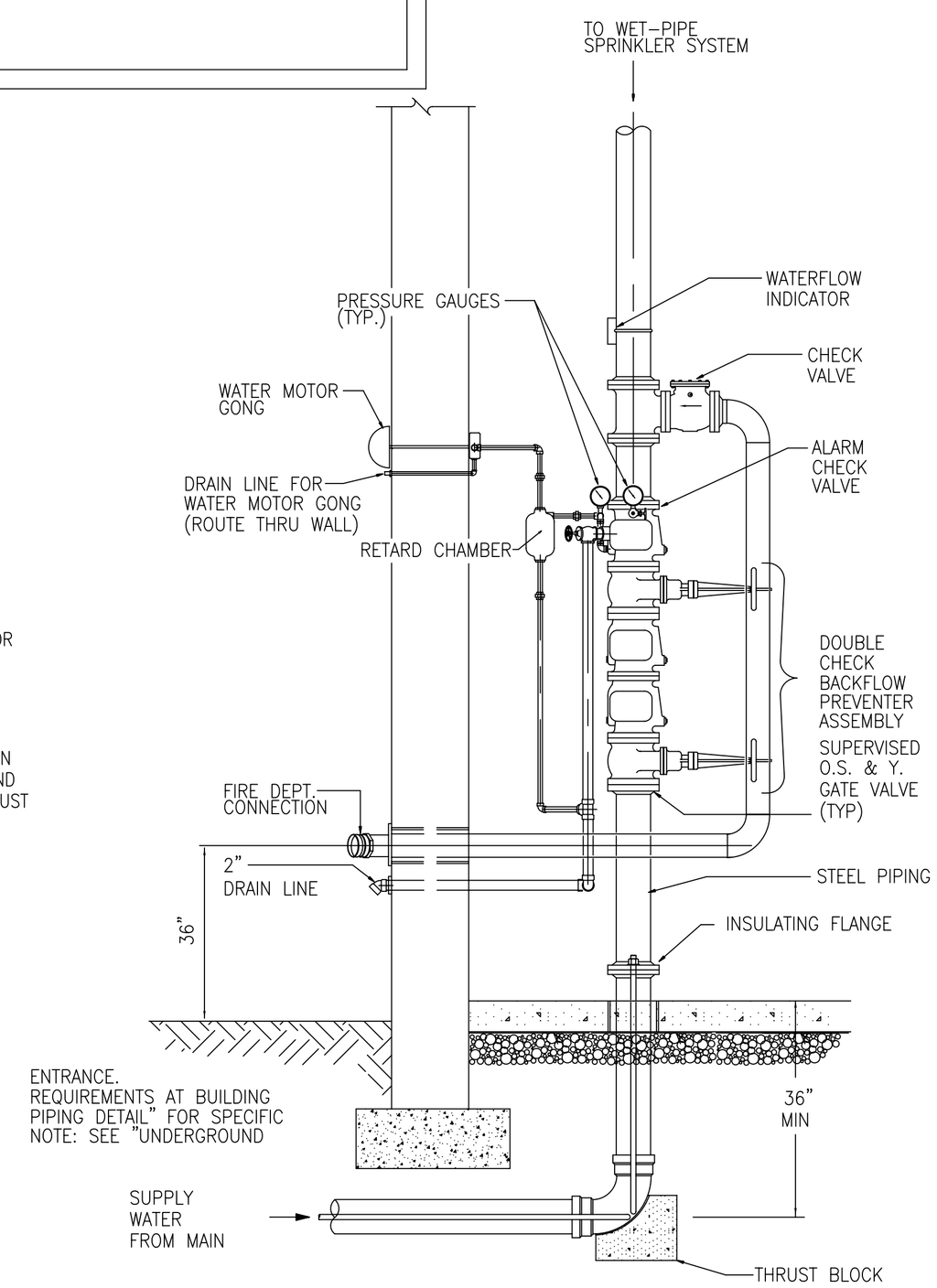

WET PIPE RISER
NOT TO SCALE

NOTES

1. THE ENTIRE FIRE STATION FACILITY SHALL BE PROTECTED BY A WET PIPE AUTOMATIC SPRINKLER SYSTEM HYDRAULICALLY DESIGNED IN ACCORDANCE WITH NFPA 13.
2. FIRE FLOW TEST DATA FOR HYDRANT #170:
   STATIC PRESSURE - 80 PSI
   FLOW - 1752 GPM @ 20 PSI
3. WATER MOTOR ALARM SHALL BE PAINTED TO MATCH EXTERIOR COLOR OF BUILDING.
4. INSPECTOR'S TEST VALVE TO BE PIPED FROM END OF LAST BRANCH LINE WITH NO EXPOSED PIPE IN FINISHED SPACES.
5. ALL FIRE WALL PENETRATIONS SHALL BE MADE WITH UL APPROVED FIRESTOPPING SYSTEMS LISTED TO MAINTAIN THE FIRE RATING OF THE WALL IN WHICH THEY ARE INSTALLED.

DPW Engineering
Fort Rucker, Alabama

Symbol	No.	Description	Date	Approved
		Revisions		

Designed By: G. TALBERT
Date: 11/08/06
Drawn By: G. TALBERT
File No.
Checked By:
CADD File Name: HB 001326J-FS1
Reviewed By:
Solicitation Number: X

ENGINEERING BRANCH
FORT RUCKER, ALABAMA

PROJECT JJ 00001-5J

FT RUCKER, ALABAMA
WOCC ACADEMIC BUILDING 6012

FIRE SUPPRESSION PLAN

Sheet Reference Number:
FS-1

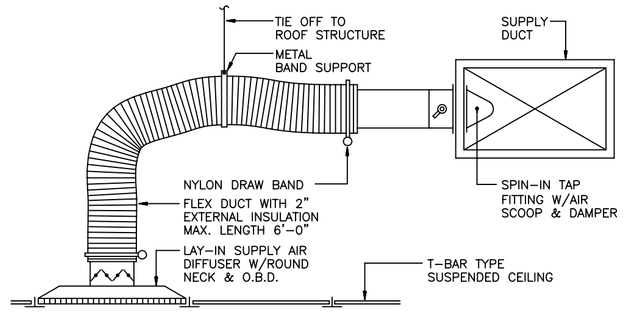

SUPPLY AIR DIFFUSER DETAIL
N.T.S.

O.A. DAMPERS SHALL BE OPPOSED BLADE TYPE AND SHALL BE EXPOSED IN MECHANICAL ROOM FOR FUTURE ADJUSTMENT

O.A. LOUVER SHALL BE A MINIMUM OF 10'-0" ABOVE FLOOR LEVEL TO TO MEET FORCED PROTECTION STANDARDS

PROVIDE DUCT SMOKE DETECTORS ON SUPPLY AND RETURN SIDE OF ALL AHUs.

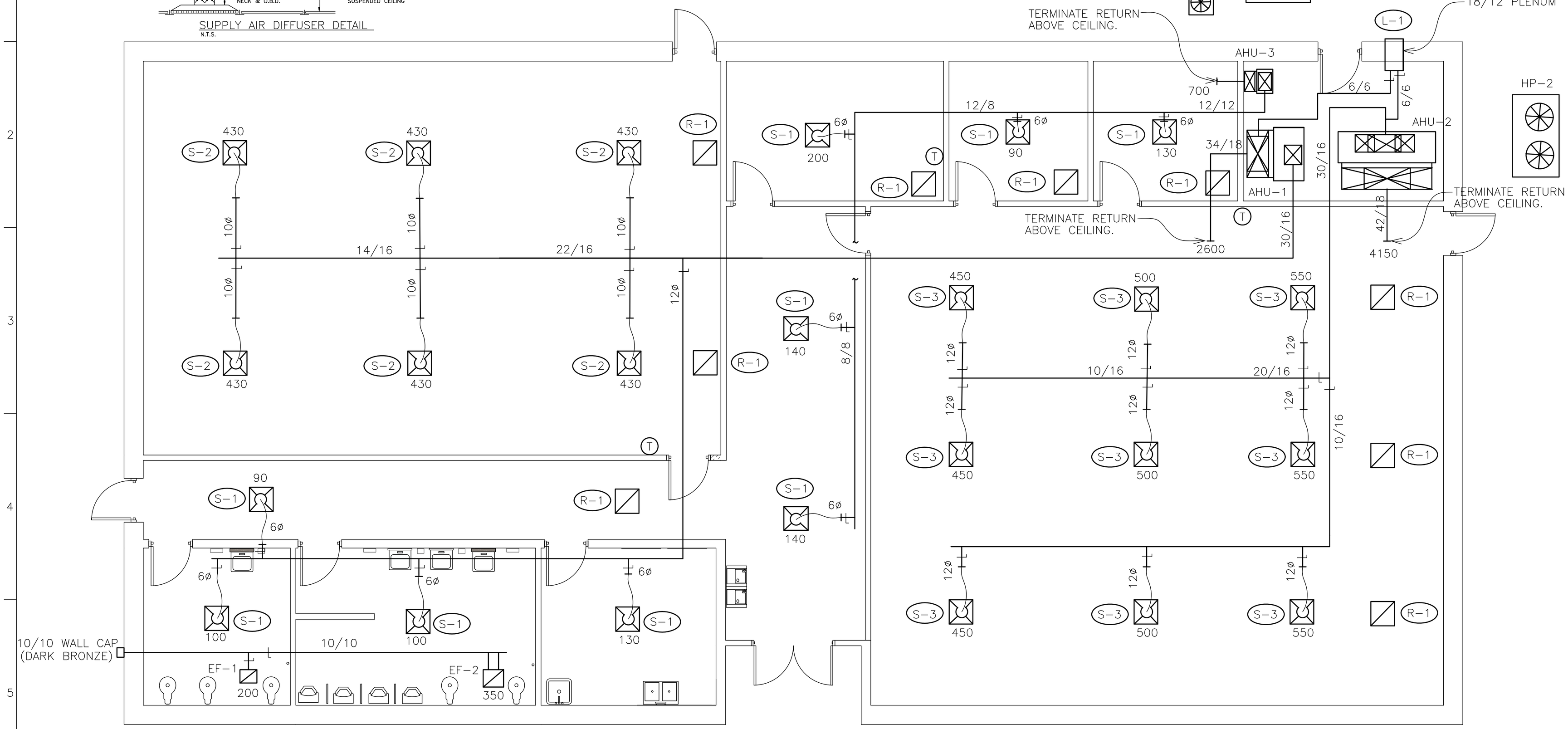

A HVAC PLAN

SCALE: 1/4" = 1'-0"

EXHAUST FAN SCHEDULE

UNIT NO.	TYPE	CFM	E.S.P.	ELECTRICAL DATA	
				VOLTAGE	WATTS
EF-1	CEILING	196	.250	120/1/60	48
EF-2	CEILING	351	.250	120/1/60	121

1. PROVIDE BACKDRAFT DAMPERS IN EACH UNIT.
2 INTERLOCK WITH LIGHT SWITCH SERVING ASSOCIATED ROOM.
3. EF-1: GREENHECK MODEL SP-A200.
4. EF-2: GREENHECK MODEL SP-A410.

AIR HANDLING UNIT WITH HEAT PUMP SCHEDULE

UNIT NO.	S.A.	O.A.	R.A.	E.S.P.	COOLING (MBH)		HEATING (MBH)	AUX. HEAT (KW)	AHU ELECTRICAL DATA	
					TOTAL	SENS.			VOLTAGE	HP
AHU-1	3000	400	2600	1.0	107.0	77.0	68.4	10.0	208/3/60	3.7
AHU-2	4500	350	4150	0.6	174.0	122.0	109.0	10.0	208/3/60	3.7
AHU-3	700	0	700	0.4	16.2	13.2	10.4	5.0	208/1/60	0.25

1. HEAT PUMP SHALL BE SELECTED TO MATCH CAPACITY DATA FOR AHU.
2. COOLING PERFORMANCE DATA BASED ON 95 F OUTDOOR TEMPERATURE AND 80 F EDB/67 F EWB.
3. HEATING PERFORMANCE DATA BASED ON 17 F OUTDOOR TEMPERATURE AND 65 F EDB.
4. AHU-1: CARRIER MODEL 40RMQ012; HP-1: CARRIER MODEL 38ARQ12 (208/3/60).
5. AHU-2: CARRIER MODEL 40RMQ016; HP-2: CARRIER MODEL 38ARQ16 (208/3/60).
6. AHU-3: CARRIER MODEL FA4B; HP-3: CARRIER MODEL 38EYG (208/1/60).

DIFFUSER, GRILLE AND LOUVER SCHEDULE

(S-1) 24" x 24" SUPPLY DIFFUSER, 6" DIA., TITUS TMS OR EQUAL

(S-2) 24" x 24" SUPPLY DIFFUSER, 10" DIA., TITUS TMS OR EQUAL

(S-3) 24" x 24" SUPPLY DIFFUSER, 12" DIA., TITUS TMS OR EQUAL

(R-1) 24" x 24" EGG CRATE RETURN GRILLE WITH 22" x 22" OPENING, TITUS 50F-NT OR EQUAL

(L-1) 18" x 12" EXTERIOR LOUVER, 45 DEGREE, FINISH SHALL MATCH WINDOWS. GREENHECK MODEL EDJ OR EQUAL.

ALL TURNS SHALL BE FULL RADIUS ELBOWS OR VANED

ALL DUCT INSULATION SHALL BE EXTERNAL

MOUNT HPs ON CONCRETE SLABS. SEE ARCHITECTURAL DRAWING A-1 FOR CONCRETE SLAB DETAILS.

MOUNT AHUs ON 4" THICK CONCRETE HOUSEKEEPING PADS

RUN FULL SIZE PVC CONDENSATE DRAIN LINE FROM AHU TO BUILDING EXTERIOR. PROVIDE TRAP ON DRAIN.

DPW Engineering
Fort Rucker, Alabama

Symbol	No.	Description	Date	Approved
		Revisions		

Designed By: G. TALBERT
Drawn By: G. TALBERT
Checked By:
Reviewed By: C. POWELL
Date: 11/08/06
File No.
CADD File Name: HB 00132GJ-M1
Solicitation Number: N/A

DIRECTORATE-PUBLIC WORKS
ENGINEERING BRANCH
FORT RUCKER, ALABAMA

HB 00132-6J

FORT RUCKER, AL
WOCC ACADEMIC BUILDING 6012

HVAC PLAN FLOOR PLAN

Sheet Reference Number:
M-1

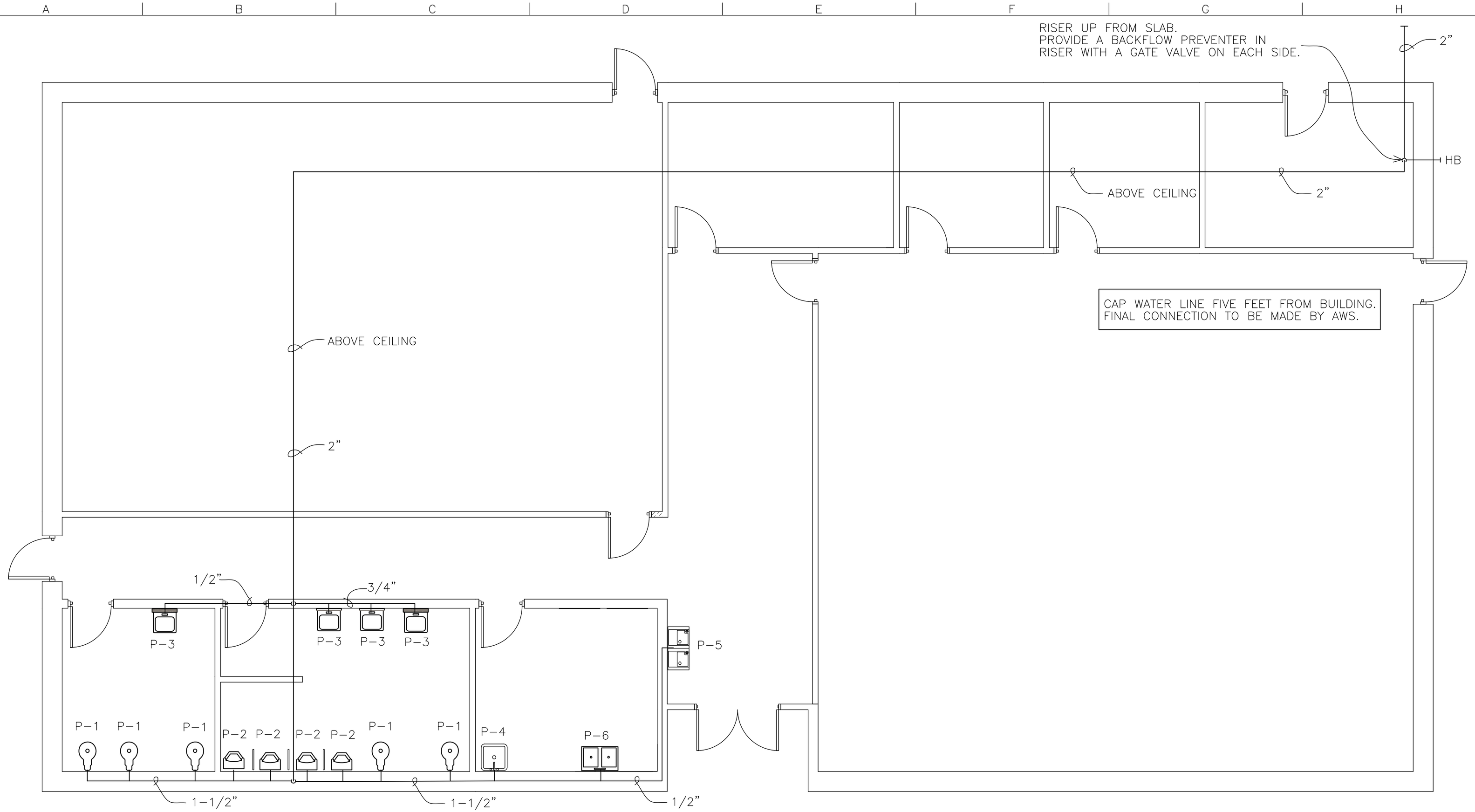

A WATER PLAN

0 2' 4' 8'

SCALE: 1/4" = 1'-0"

PLUMBING FIXTURE SCHEDULE

SYM	DESCRIPTION	CW	HW	W	MANUFACTURER/MODEL #	REMARKS
P-1	WATER CLOSET	1"		3"	AMERICAN STANDARD/CADET	NOTE 1
P-2	URINAL	3/4"		2"	AMERICAN STANDARD/LYNBROOK 6601.012	NOTE 2
P-3	LAVATORY	1/2"		1-1/4"	KOHLER #1721	NOTE 3
P-4	JANITORS SINK	1/2"		3"	SWAN CORPORATION/MF-1F	NOTE 4
P-5	WATER COOLER	1/2"		1-1/4"	HAWS/HWUAC08L	NOTE 5
P-6	SINK-DOUBLE BOWL	1/2"		2"	KOHLER /K3199-4H-NA	NOTE 6
FD	FLOOR DRAIN			3"	ZURN/C02452-ST	NOTE 7
HB	HOSE BIB	3/4"				
CO	CLEAN OUT			4"	ZURN	

NOTES:

1 - VITREOUS CHINA, 1.8 GAL FLUSH, FLOOR MOUNTED, FLUSH VALVE, OLSONITE #95 OPEN FRONT SEAT LESS COVER, ADA COMPLIANT.
2 - VITREOUS CHINA, BLOWOUT, 1-1/4" TOP SPUD, FLUSH VALVE, RIM TO BE MOUNTED 16" FROM FINISHED FLOOR, ADA COMPLIANT.
3 - VITRIOUS CHINA, SINGLE CONTROL FAUCET, ADA COMPLIANT.
4 - SINGLE COMPARTMENT UTILITY SINK, W/AMERICAN STANDARD 8340.204 FAUCET WITH PAIL HOOK & INTEGRAL STOPS.
5 - WALL HUNG, BARRIER FREE, BI-LEVEL TYPE, ADA COMPLIANT.
6 - STAINLESS STEEL, DOUBLE BOWL, 33" x 22" x 8", SELF RIMMING, 19 GUAGE, SINGLE LEVER KITCHEN FAUCET.
7 - SQUARE TOP.

DPW Engineering
Fort Rucker, Alabama

Symbol	No.	Description	Date	Approved

Revisions

Date: 11/08/06
File No.
CADD File Name: HB 001326J-P1
Solicitation Number: N/A

Designed By: G. TALBERT
Drawn By: G. TALBERT
Checked By:
Reviewed By: C. POWELL

DIRECTORATE-PUBLIC WORKS
ENGINEERING BRANCH
FORT RUCKER, ALABAMA

HB 00132-6J

FORT RUCKER, AL
WOCC ACADEMIC BUILDING 6012

WATER PLAN

Sheet Reference Number:
P-1

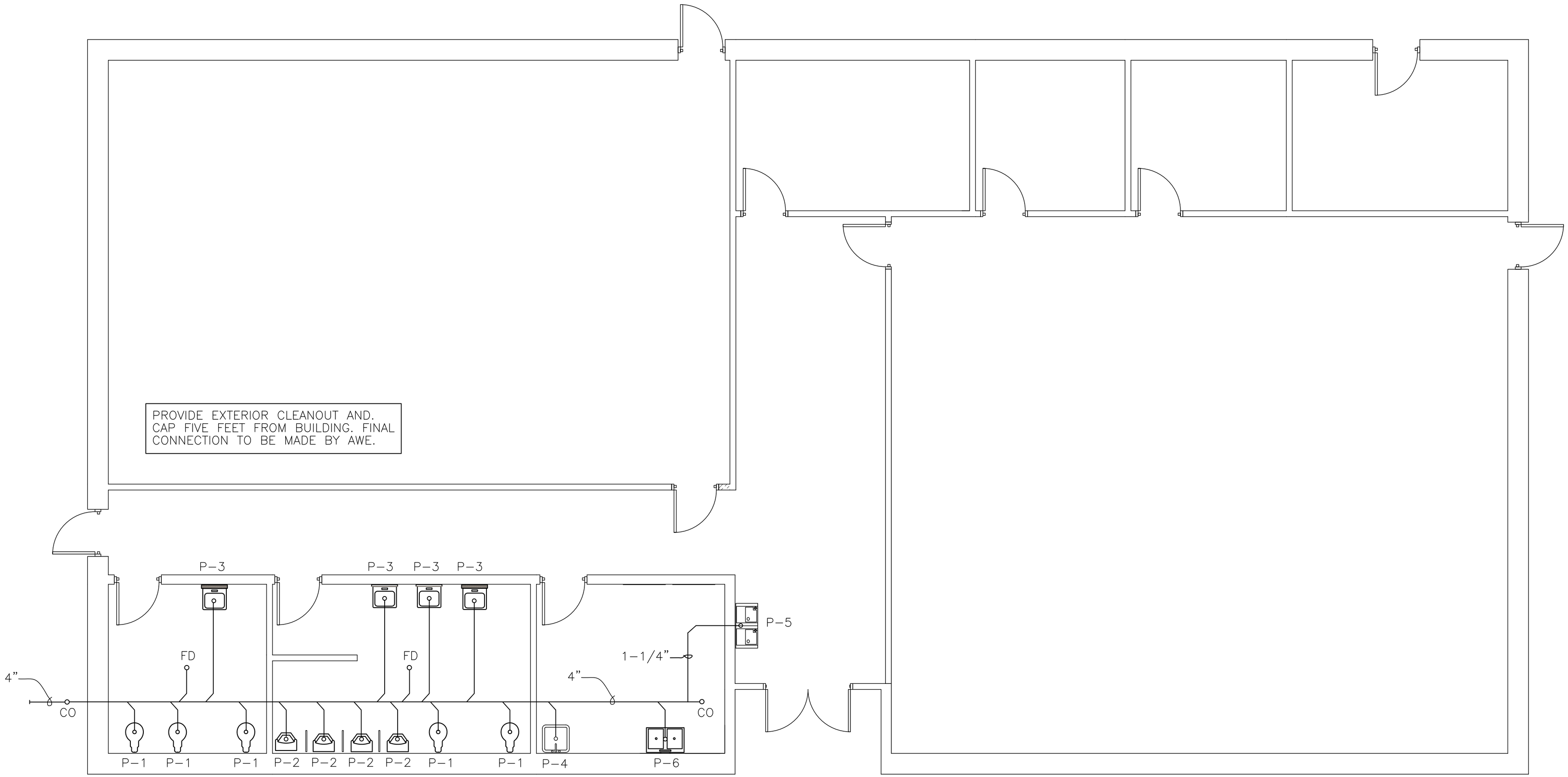

A SEWER PLAN

0 2' 4' 8'

SCALE: 1/4" = 1'-0"

PLUMBING FIXTURE SCHEDULE

SYM	DESCRIPTION	CW	HW	W	MANUFACTURER/MODEL #	REMARKS
P-1	WATER CLOSET	1"		3"	AMERICAN STANDARD/CADET	NOTE 1
P-2	URINAL	3/4"		2"	AMERICAN STANDARD/LYNBROOK 6601.012	NOTE 2
P-3	LAVATORY	1/2"		1-1/4"	KOHLER #1721	NOTE 3
P-4	JANITORS SINK	1/2"		3"	SWAN CORPORATION/MF-1F	NOTE 4
P-5	WATER COOLER	1/2"		1-1/4"	HAWS/HWUAC08L	NOTE 5
P-6	SINK-DOUBLE BOWL	1/2"		2"	KOHLER /K3199-4H-NA	NOTE 6
FD	FLOOR DRAIN			3"	ZURN/C02452-ST	NOTE 7
HB	HOSE BIB	3/4"				
CO	CLEAN OUT			4"	ZURN	

NOTES:

1 - VITREOUS CHINA, 1.8 GAL FLUSH, FLOOR MOUNTED, FLUSH VALVE, OLSONITE #95 OPEN FRONT SEAT LESS COVER, ADA COMPLIANT.
2 - VITREOUS CHINA, BLOWOUT, 1-1/4" TOP SPUD, FLUSH VALVE, RIM TO BE MOUNTED 16" FROM FINISHED FLOOR, ADA COMPLIANT.
3 - VITRIOUS CHINA, SINGLE CONTROL FAUCET, ADA COMPLIANT.
4 - SINGLE COMPARTMENT UTILITY SINK, W/AMERICAN STANDARD 8340.204 FAUCET WITH PAIL HOOK & INTEGRAL STOPS.
5 - WALL HUNG, BARRIER FREE, BI-LEVEL TYPE, ADA COMPLIANT.
6 - STAINLESS STEEL, DOUBLE BOWL, 33" x 22" x 8", SELF RIMMING, 19 GUAGE, SINGLE LEVER KITCHEN FAUCET.
7 - SQUARE TOP.

DPW Engineering
Fort Rucker, Alabama

Symbol	No.	Description	Date	Approved

Revisions

Date: 11/08/06
File No.
CADD File Name: HB 001326J-P2
Solicitation Number: N/A

Designed By: G. TALBERT
Drawn By: G. TALBERT
Checked By:
Reviewed By: C. POWELL

DIRECTORATE-PUBLIC WORKS
ENGINEERING BRANCH
FORT RUCKER, ALABAMA

HB 00132-6J

FORT RUCKER, AL
WOCC ACADEMIC BUILDING 6012

SEWER PLAN

Sheet Reference Number:
P-2

NOTE: GENERAL CONTRACTOR SHALL RUN SEWER PIPING APPROXIMATELY FIVE FEET BEYOND BUILDING OR CONCRETE AND TEMPORARILY CAP.
AWE SHALL MAKE THE TIE-IN AND ROUTE THE BALANCE TO THE SEPTIC SYSTEM.

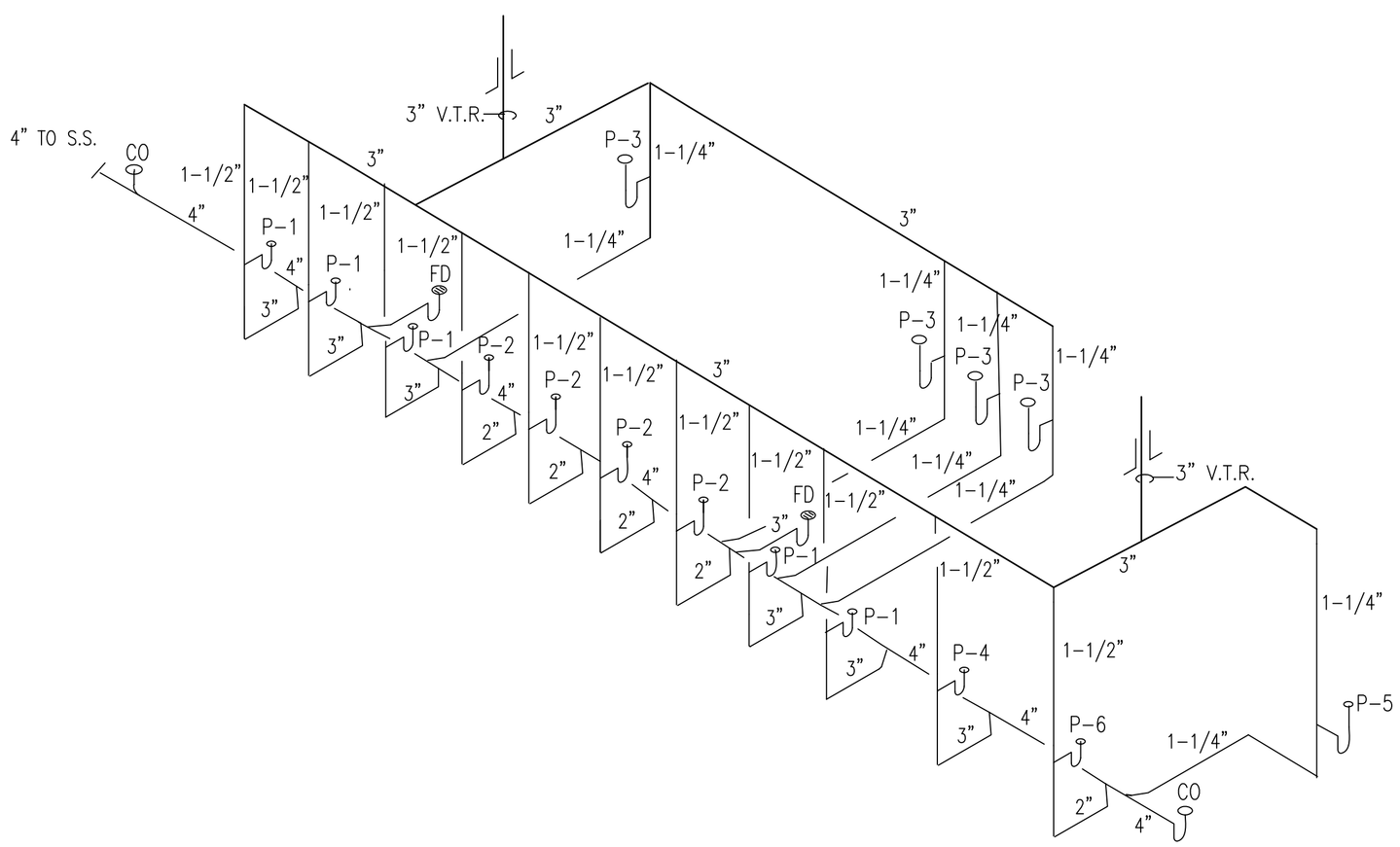

SANITARY SEWER RISER

SCALE: NOT TO SCALE

PLUMBING GENERAL NOTES

1. THE PLUMBING DRAWINGS ARE DIAGRAMMATIC AND SHOW THE RELATIONSHIP BETWEEN FIXTURES AND CONNECTIONS. DO NOT SCALE THE DRAWINGS FOR EXACT LOCATIONS. VERIFY LOCATIONS WITH ARCHITECTURAL DRAWINGS.

2. CONTRACTOR SHALL COORDINATE PLUMBING WORK WITH THE WORK OF OTHER TRADES AND SHALL NOTIFY OTHERS OF ANY CHASES OR ACCESS REQUIREMENTS FOR HIS PORTION OF THE WORK.

3. INSTALL PLUMBING IN ACCORDANCE WITH NATIONAL, STATE AND LOCAL CODES.

4. ALL VENT PIPING TO PENETRATE ROOF A MINIMUM OF 6 INCHES. FLASH AND SEAL WEATHERTIGHT TO ROOF. VENT PIPING ABOVE ROOF SHALL BE PAINTED TO MATCH ROOF.

5. ALL WASTE PIPING 2-1/2" AND SMALLER TO SLOPE A MINIMUM OF 1/4" PER FOOT, 3 INCHES AND LARGER TO SLOPE A MINIMUM OF 1/8" PER FOOT.

6. ROUTE PIPING IN AN ORDERLY MANNER AND MAINTAIN GRADIENT.

7. INSTALL PIPING TO CONSERVE BUILDING SPACE AND NOT INTERFERE WITH USE OF SPACE.

8. GROUP PIPING WHENEVER PRACTICAL AT COMMON ELEVATIONS.

9. INSTALL PIPING TO ALLOW FOR EXPANSION AND CONTRACTIONS WITHOUT STRESSING PIPE, JOINTS OR CONNECTED EQUIPMENT.

10. PROVIDE CLEARANCE FOR INSTALLATION OF INSULATION AND ACCESS TO VALVES AND FITTINGS.

11. PROVIDE ACCESS WHERE VALVES AND FITTINGS ARE NOT EXPOSED.

12. INSTALL VALVES WITH STEMS UPRIGHT OR HORIZONTAL, NOT INVERTED.

13. INSTALL BALL VALVES FOR SHUT-OFF AND TO ISOLATED EQUIPMENT, PART OF SYSTEMS, OR VERTICAL RISERS.

14. INSTALL GLOBE VALVES FOR THROTTLING, BYPASS OR MANUAL FLOW CONTROL SERVICES.

15. SANITARY WASTE AND VENT PIPING INSIDE BUILDING BELOW SLAB SHALL BE SCH 40 PVC PIPE & FITTINGS ASTM D2665 WITH SOLVENT WELD JOINTS WITH ASTM D2564 SOLVENT CEMENT. UNDERGROUND PIPE SHALL BE EMBEDDED IN 6 INCHES OF SAND ALL AROUND PIPE. SANITARY WASTE AND VENT PIPING ABOVE SLAB SHALL BE SCH 40 PVC PIPE AND FITTINGS ASTM D2665 WITH JOINTS SOLVENT WELDED WITH ASTM D2564 SOLVENT CEMENT EXCEPT IN RETURN AIR PLENUMS WHERE CAST IRON PIPE & FITTINGS ONLY WILL BE USED. CAST IRON PIPE WILL BE SERVICE WEIGHT NO-HUB CAST IRON PIPE WITH CAST IRON FITTINGS CONFORMING TO CISPI 310 AND ASTM C-564.

16. HOT AND COLD WATER ABOVE GRADE TO BE ASTM B88 TYPE L HARD DRAWN COPPER TUBING WITH ASME B16.18 CAST BRONZE OR ASME B16.22 WROUGHT COPPER AND BRONZE FITTINGS AND ASTM B32 SOLDER, GRADE 95TA JOINTS.

17. HOT AND COLD WATER PIPING BELOW GRADE TO BE ASTM B88 TYPE K SOFT DRAWN COPPER TUBING WITH ASME B16.18 CAST BRONZE OR ASME B16.22 WROUGHT COPPER AND BRONZE FITTINGS AND ASTM B32 SOLDER, GRADE 95TA JOINTS WITH NO JOINTS BELOW SLAB.

18. HOT AND COLD WATER PIPING ABOVE GRADE SHALL BE INSULATED WITH FIBERGLASS PIPE INSULATION WITH ALL SERVICE JACKET. CAULK ALL WALL AND FLOOR PENETRATIONS.

19. ADJUST STOPS OR VALVES FOR INTENDED WATER FLOW RATE TO FIXTURES WITHOUT SPLASHING, NOISE OR OVERFLOW.

20. EXTEND CLEANOUTS TO FINISHED FLOOR OR WALL SURFACE. LUBRICATE THREADED CLEANOUT PLUGS WITH MIXTURE OF GRAPHITE AND LINSEED OIL. ENSURE CLEARANCE OF CLEANOUT FOR RODDING OF DRAINAGE SYSTEM. ENCASE EXTERIOR CLEANOUTS IN CONCRETE FLUSH WITH GRADE.

21. INSTALL WATER HAMMER ARRESTORS COMPLETE WITH ACCESSIBLE ISOLATION VALVE ON HOT AND COLD WATER SUPPLY PIPING.

22. CONTRACTOR TO ROUGH-IN FIXTURE PIPING CONNECTIONS IN ACCORDANCE WITH MINIMUM SIZES INDICATED IN FIXTURE SCHEDULE FOR PARTICULAR FIXTURE.

23. INSTALL EACH FIXTURE WITH TRAP THAT IS EASILY REMOVABLE FOR SERVICING AND CLEANING.

24. PROVIDE CHROME PLATED RIGID OR FLEXIBLE SUPPLIES TO FIXTURES WITH LOOSE KEY STOPS, REDUCERS AND ESCUTCHEONS.

25. ALL FLOOR DRAINS SHALL BE PROVIDED WITH TRAP PRIMERS.

DPW Engineering
Fort Rucker, Alabama

Symbol	No.	Description	Date	Approved
		Revisions		

Date: 11/08/06
File No.
CADD File Name: HB 001326J-P3
Solicitation Number: N/A

Designed By: G. TALBERT
Drawn By: G. TALBERT
Checked By:
Reviewed By: C. POWELL

DIRECTORATE-PUBLIC WORKS
ENGINEERING BRANCH
FORT RUCKER, ALABAMA

HB 00132-6J

FORT RUCKER, AL
WOCC ACADEMIC BUILDING 6012
PLUMBING NOTES AND RISER DIAGRAM

Sheet Reference Number:
P-3

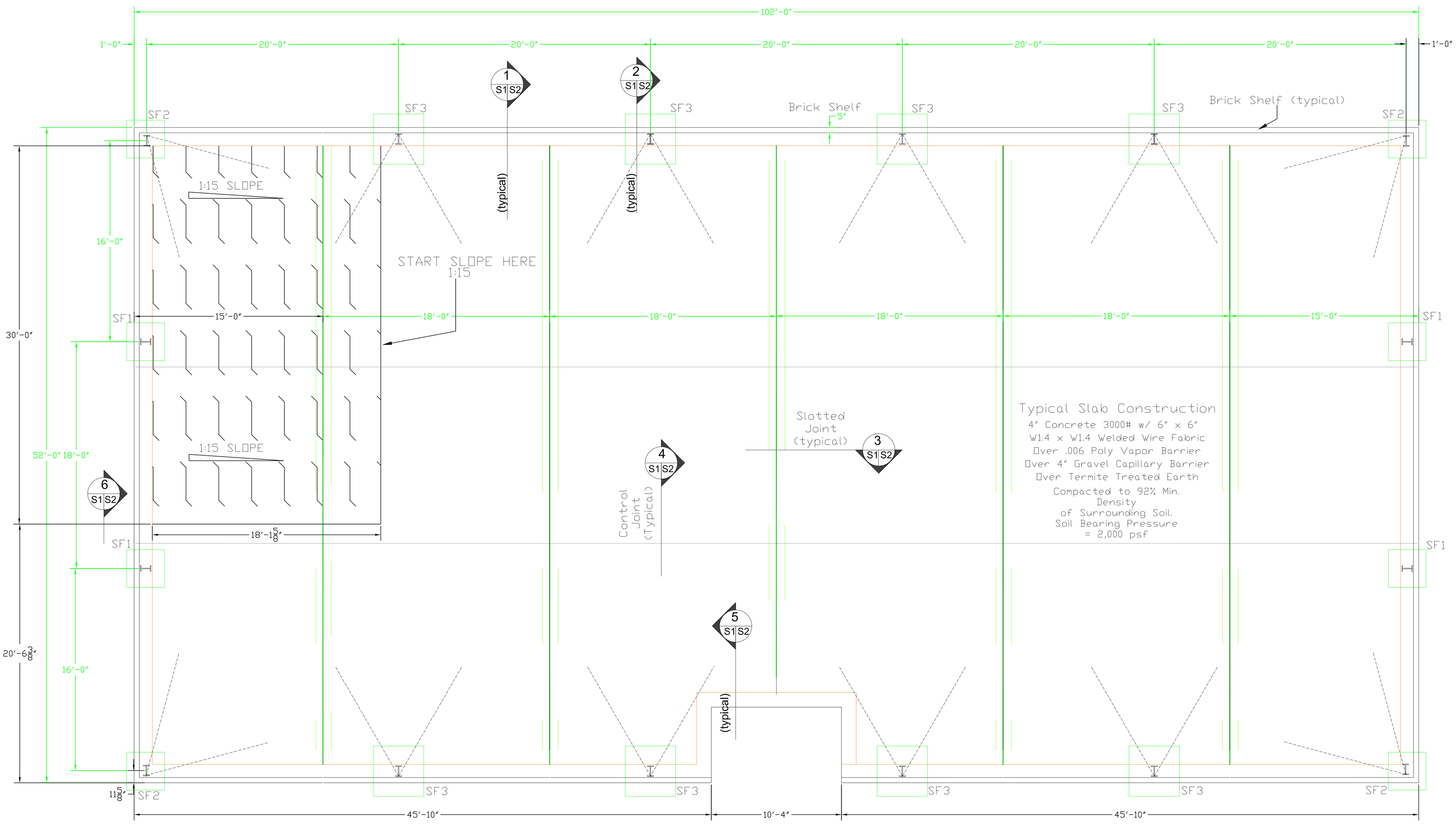

This Drawing is Typical Construction ONLY and is Provided for Contractor Take-Off. Contractor Shall Coordinate with Metal Building Manufacturer and Shall Provide Foundation Design Drawings and Load Calculations for Government Approval Prior to Construction. Drawings and Calculations Shall Bear the Seal of a Registered Architect/Engineer. Contractor is Required to Coordinate With all Crafts and Suppliers to Incorporate all Necessary Embedded Fixtures/Equipment.

NOTES:

1. PROVIDE 4'X5' STOOPS AT ALL SECONDARY EXITS EXCEPT PROVIDE STOOP WITH INTEGRATED HVAC PADS AT WHERE HVAC IS LOCATED. SEE TYPCIAL STOOP SECTION DETAIL ON DRAWING S-2.

2. PROVIDE SIDEWALK EXTENDING FROM FRONT ENTRY TO ANDREWS' AVENUE AS SHOWN ON CIVIL SITE PLAN.

DPW
Engineering
Fort Rucker, Alabama

Symbol	No.	Description	Date	Approved
		Revisions		

Designed By: J. CURRIE
Drawn By: J. CURRIE
Checked By: J. CURRIE
Reviewed By: C. POWELL
Date:
File No.
CADD File Name: HB 001326J-S1
Solicitation Number: N/A

DIRECTORATE-PUBLIC WORKS
ENGINEERING BRANCH
FORT RUCKER, ALABAMA

HB 00132-6J

FORT RUCKER, AL
WOCC ACADEMIC BUILDING 6012

FOUNDATION PLAN

Sheet Reference Number:
S-1

This Drawing is Typical Construction ONLY and is Provided for Contractor Take-Off. Contractor Shall Coordinate with Metal Building Manufacturer and Shall Provide Foundation Design Drawings and Load Calculations for Government Approval Prior to Construction. Drawings and Calculations Shall Bear the Seal of a Registered Architect/Engineer.

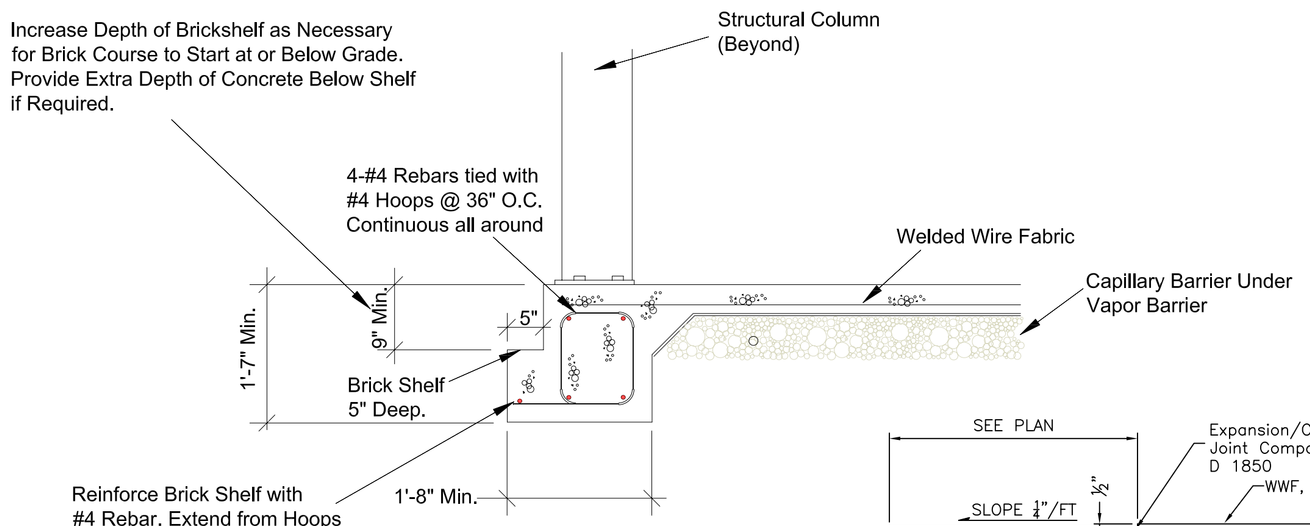

1 S2S1 Section
NTS

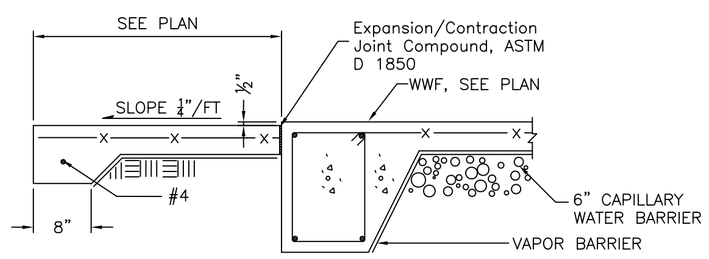

STOOP SECTION TYPICAL 7 S-2 S-1
1"=1'-0"

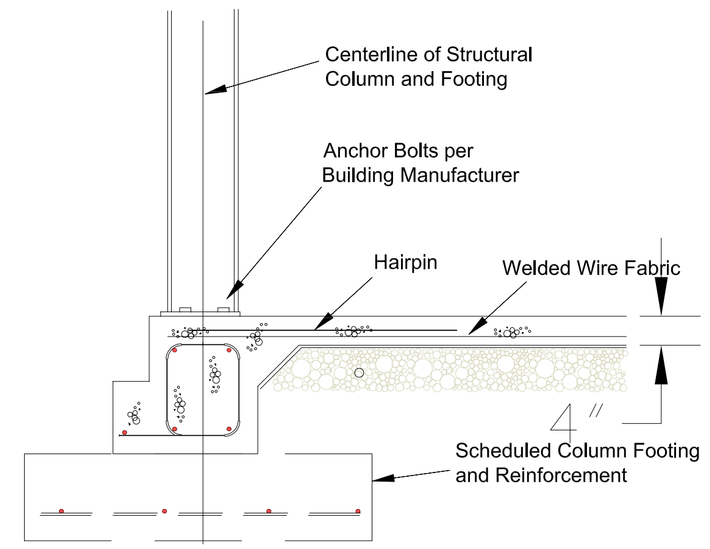

2 S2S1 Section
NTS

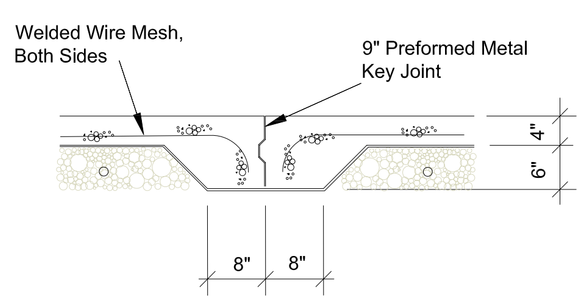

3 S2S1 Section
NTS

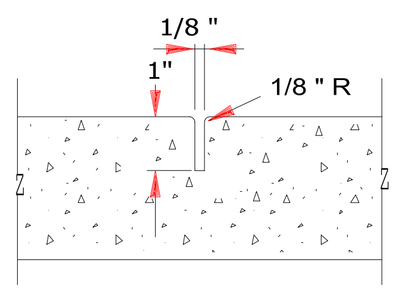

4 S2S1 Section
NTS

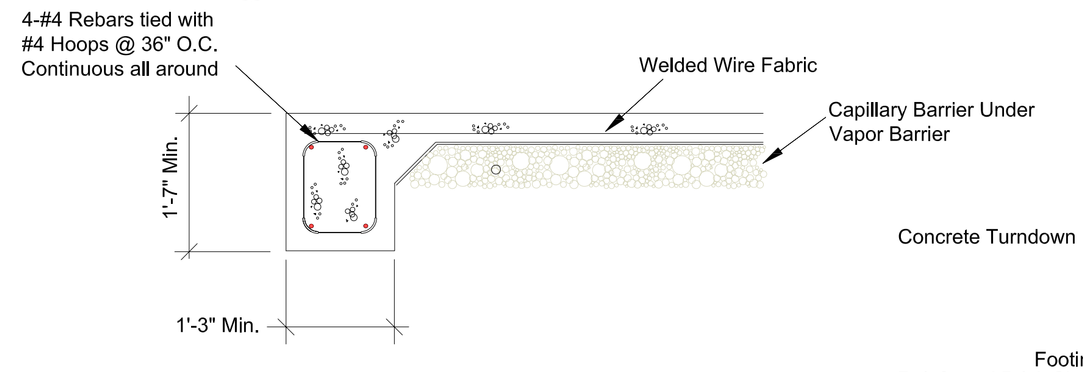

5 S2S1 Section
NTS

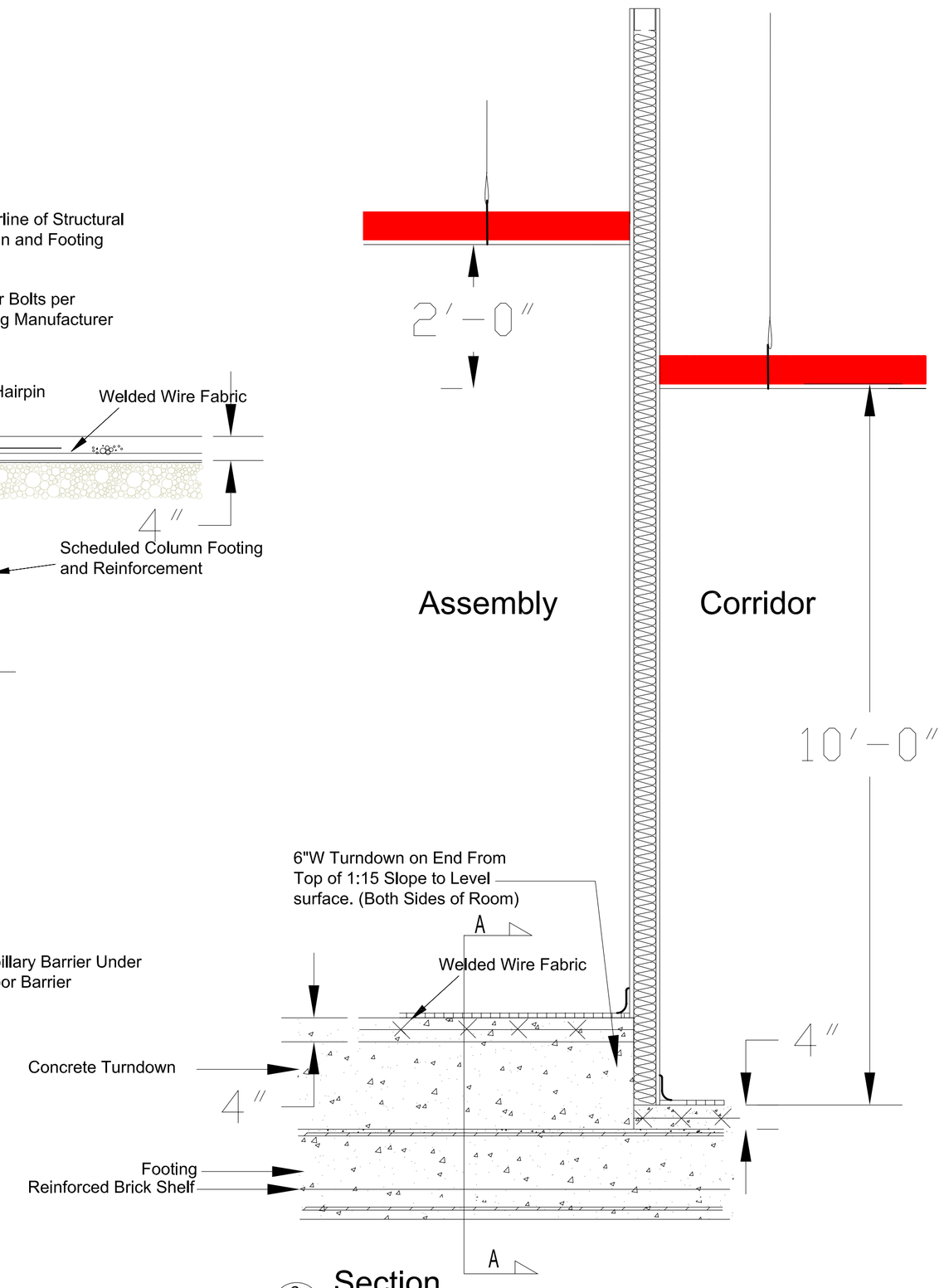

6 S2S1 Section
NTS

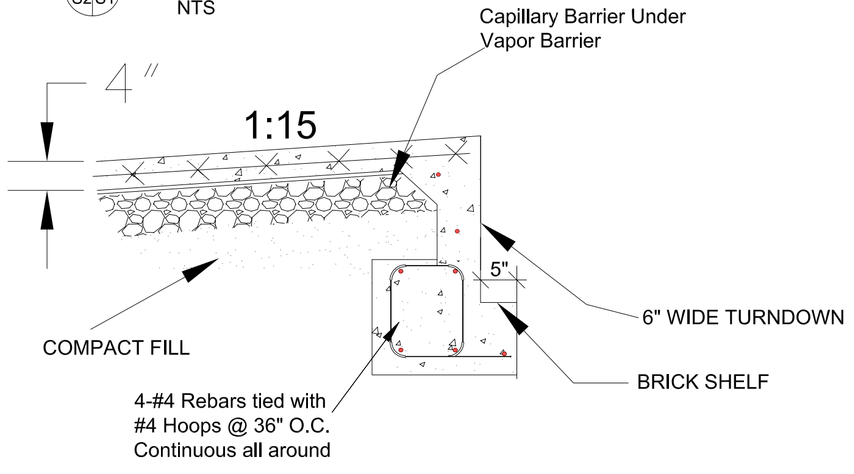

A-A S2S2 Section
NTS

Footing Schedule

Mark	Size	Reinforcement
SF1	3'-0" x 3'-0" x 1'-0"	4-#4 each way
SF2	3'-0" x 3'-0" x 1'-0"	4-#4 each way
SF3	4'-0" x 4'-0" x 1'-0"	4-#4 each way

Soil Bearing Pressure = 2000 psf

DPW Engineering
Fort Rucker, Alabama

Revisions

Symbol	No.	Description	Date	Approved

Designed By: J. CURRIE
Drawn By: J. CURRIE
Checked By: J. CURRIE
Reviewed By: C. POWELL
Date:
File No.
CADD File Name: HB 001326J-S2
Solicitation Number: N/A

DIRECTORATE-PUBLIC WORKS
ENGINEERING BRANCH
FORT RUCKER, ALABAMA

HB 00132-6J

FORT RUCKER, AL
WOCC ACADEMIC BUILDING 6012
FOUNDATION PLAN DETAILS

Sheet Reference Number:
S-2

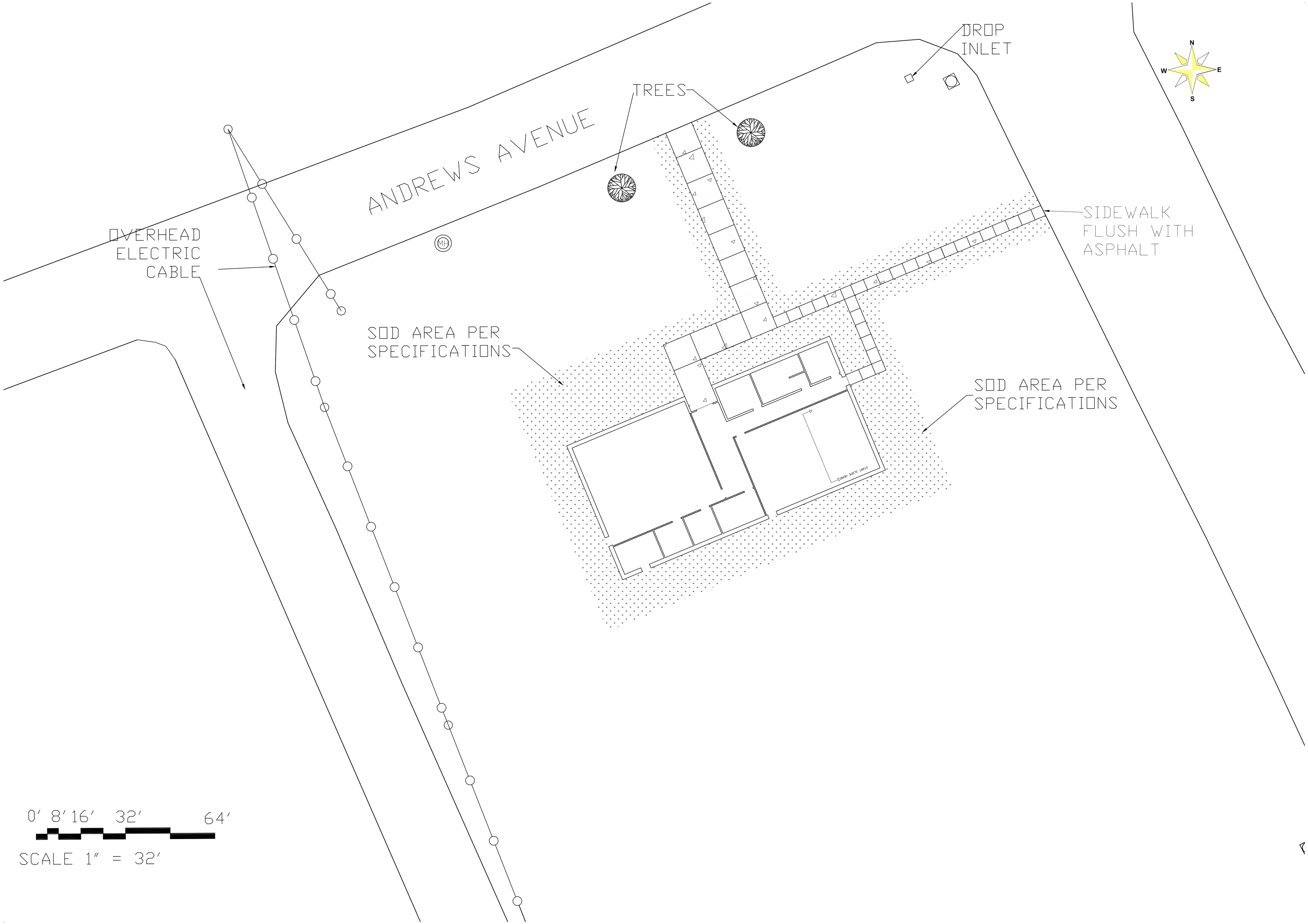

DIRECTORATE OF PUBLIC WORKS
Fort Rucker, Alabama

Symbol	No.	Description	Date	Approved
		Revisions		

Designed By: –
Drawn By: J. CURRIE
Checked By: –
Reviewed By: –
Date: DEC. 2006
File No.
CADD File Name: HB 00132GJ-S3
Solicitation Number:

DIRECTORATE-PUBLIC WORKS
ENGINEERING BRANCH
FORT RUCKER, ALABAMA

HB 00132-6J

FORT RUCKER, ALABAMA
WOCC ACEDEMIC BUILDING
WOCC ACADEMIC BUILDING 6012

SODDING PLAN

Sheet Reference Number:
S-3